CBC
621.753.2:
331
CIN/TmI
MFN 2758
M 08.14
353t

Copyright (c) INTERNATIONAL LABOUR ORGANISATION (CINTERFOR) - 1976

Publications of the International Labour Office enjoy copyright under Protocol 2 of the Universal Copyright Convention.

CINTERFOR
SERVICIO DE INFORMACION Y DOCUMENTACION
MONTEVIDEO

The Inter-American Centre of Investigation and Documentation for Vocational Training (CINTERFOR) is a regional, specialist agency of the International Labour Organisation (ILO).

Established in 1964, CINTERFOR has as its objects the stimulation and co-ordination of the efforts of institutes, organisations and enterprises which are concerned with Vocational Training in Latin America.

Postal Add: P. O. Box 1761
Telegraph Add: "CINTERFOR"
Montevideo - Uruguay.

27 OCT 1978

FOREWORD

1) The following sheets will serve as patterns for preparing masters or stencils to be used on office offset machines, mimeographs, or other types of duplicators.
They should be handled carefully so as not to damage or soil the paper.

2) It is advisable to check the sheets before making the masters so that faint or broken lines can be retouched with an ordinary pencil or drawing ink, and spots and imperfections masked with gouache (white tempera).

3) Any addenda to the sheets, e.g. local codes, may be written on white paper and pasted into position. The same procedure can be used when correcting misprints or other errata.

INTRODUCTION

This Cinterfor Basic Collection (CBC) for the Machinery Fitter forms part of a group of CBC's called "General Mechanics".

The traditional family of "General Mechanics" integrates for the most part, those occupations that have to do with the working of metals, sub-group 8-3 of ILO's International Standard Classification of Occupations (ISCO), and sub-groups 8-4 and 8-7 of ISCO.

CBC's do not constitute manuals in themselves but, planned with the necessary flexibility, they serve as a base for the preparation of instruction manuals for all types of courses in vocational training as well as in technical education. These courses can be designed to meet varying objectives and to serve different levels of students.

This material has, moreover, regional applicability, having been produced by multi-national, integrated, working groups of specialists from Caribbean and Latin-American countries, organized and co-ordinated by Cinterfor.

The instruction sheets of the first edition of this CBC were published in 1970. After testing their applicability and evaluating their content in numerous courses run by various institutions in Latin America, a large quantity of critical observations were relayed to Cinterfor, thus contributing to improving the material.

As a result of these observations the sheets were modified to produce this second, revised edition.

Field of Application of the Machinery Fitter CBC

The Operation and Technological Information Sheets contained in this Machinery Fitter CBC are suited for use in preparing teaching materials for workshop practice and theoretical aspects of the following trades which are included in the International Standard Classification of Occupations.

8-41.05 MACHINERY FITTER (GENERAL)

Using machine tools he makes in entirety the various parts and sections of machines and mechanical equipment following specifications, or he reproduces broken or worn elements, and he fits, assembles and repairs machine parts:

> He examines drawings and specifications of the piece he intends to make or prepares them himself by following general descriptions that he has been given; he makes the necessary calculations and sets up a work flow; he measures and marks dimensions and reference points on metal so as to give it the desired shape. He adjusts and sees to the functioning of machine tools which are used to cut and shape pieces of metal to fit specifications, checking the exactness of the piece with micrometers, callipers and other measuring instruments. He tempers and heats metal pieces, welds joints and breaks; sometimes after effecting repairs, he assembles machine parts carrying out similar tasks to those required of a general machine assembler-fitter (8-41.10); he checks on new or recently repaired machinery, observing their functioning and running tests to determine the problems caused by defective parts.

It is also applicable to the total or partial training process for other occupations such as:

8-41.10 Machinery Fitter-Assembler (General)
8-41.15 Internal Combustion Engine Fitter-Assembler
8-32.20 Tool and Die Maker
8.32.50 Metal Marker

This CBC can also be used to increase and deepen the scope of teaching materials applicable to the training for other occupations within the family of general mechanics.

Operations and Technological Information

The operations included in this CBC are considered basic to the performance of tasks inherent to the occupation of Machinery Fitter in the Latin American area.

Programmers in institutions will note that in practice, when a manual is being prepared for specific courses, there may be operations missing. It is highly probable that these may be included in another CBC within the group on general mechanics.

As regards technological information it is absolutely essential to refer to the complete index (VII - General Index of Technological Themes for "General Mechanics" by CODE). Since a large quantity of sheets are applicable to more than one occupation, one might say that while the Operations are basic to and specifically for a particular occupation, the Technological Information Sheets are common (usually) to a group of occupations, in this case, to General Mechanics.

INDEXES

OPERATION SHEETS

I - OPERATIONS ordered by REFERENCE number. Occupation: MACHINERY FITTER.

REFERENCE	Operation
01/MF	Filing a flat surface
02/MF	Drawing straight lines on flat surfaces
03/MF	Drawing arcs of circumference
04/MF	Filing thin workpieces
05/MF	Moulding and bending thin sheet-metal
06/MF	Drilling with the drilling machine
07/MF	Countersinking
08/MF	Using a surface gauge
09/MF	Filing flat, parallel surfaces
10/MF	Filing angular flat surfaces
11/MF	Using a hack saw
12/MF	Using a chisel
13/MF	Sharpening hand tools
14/MF	Hand threading
15/MF	Filing concave and convex surfaces
16/MF	Horizontal machining of flat and parallel surfaces on the shaper
17/MF	Vertical machining of a flat surface on the shaper
18/MF	Cutting angular flat surfaces on the shaper
19/MF	Spring winding (in the vice)
20/MF	Sharpening twist drills
21/MF	Sawing with the band saw
22/MF	Threading with stock and die (By hand)
23/MF	Counterboring
24/MF	Straight reaming with a fixed hand reamer

I - OPERATIONS ordered by REFERENCE number. **Occupation:** MACHINERY FITTER

REFERENCE	Operation
25/MF	Machining straight grooves
26/MF	Cutting grooves with the shaper
27/MF	Machining "T" slots
28/MF	Reaming with the taper reamer (by hand)
29/MF	Reaming with the adjustable reamer
30/MF	Scraping
31/MF	Mounting bushings
32/MF	Removing and mounting bearings
33/MF	Aligning transmission devices

INDEXES

TECHNOLOGICAL
INFORMATION
SHEETS

(For the occupation)

III - Table of OS's and their corresponding TIS's. Suggested grouping of teaching units.
Occupation: MACHINERY FITTER

OPERATION SHEETS - OS		TECHNOLOGICAL INFORMATION SHEETS - TIS	
Ref.	Operation	Ref.	Theme
01/MF	Filing a flat surface	001 (a)	Files
		002 (a)	Carbon Steel (Preliminary ideas)
		003	The bench vice
		004	The precision straight edge
		005	The layout table and surface plate
02/MF	Drawing straight lines on flat surfaces	006	Substances for coating surfaces to be laid out
		007	The steel rule
		008 (a)	Marking instruments (Ruler, scriber, square)
		009 (a)	The centre punch
03/MF	Drawing arcs of circumference	010 (a)	Spring dividers and jenny (or odd-leg) callipers
04/MF	Filing thin workpieces	011 (b)	Carbon steel (Classifications)
		012 (a)	Non-ferrous metals (Pure metals)
05/MF	Moulding and bending thin sheet-metal	013	Hammers and mallets
		014	Hand and bench shears
06/MF	Drilling with the drilling machine	015 (a)	Devices for clamping work (Clamps and C-clamps)
		016	Drilling machines (Types, characteristics and accessories)
		017 (b)	Drill chucks and tapered sleeves
		018 (b)	Drill bits (Terminology, characteristics, types)
		019 (b)	Vernier callipers (Terminology and reading in tenths of a millimetre)
		020 (b)	Cutting velocity in the drilling machine (Table)
		021 (b)	Cutting fluids

(a) See CBC for Oxyacetylene Welder
(b) See CBC for Lathe Setter-Operator

III - Table of OS's and their corresponding TIS's. Suggested grouping of teaching units.
Occupation: MACHINERY FITTER (contd.)

OPERATION SHEETS - OS		TECHNOLOGICAL INFORMATION SHEET - TIS	
Ref.	Operation	Ref.	Theme
07/MF	Countersinking	002	Countersinks and counterbores
08/MF	Using a surface gauge	023 (b)	Drawing instruments (Surface gauge, V-blocks, jacks, angle brackets)
09/MF	Filing flat parallel surfaces	024	The Vernier calliper (Types, characteristics and use)
		025 (b)	The micrometer (Terminology, characteristics, types and applications)
10/MF	Filing angular flat surfaces	026	The try square
		027 (b)	The protractor
11/MF	Using a hack saw	028 (b)	The hack saw
12/MF	Using a chisel	029 (a)	Cold chisels
13/MF	Sharpening hand tools	030 (a)	Grinders
		031 (b)	Angle testers
14/MF	Hand threading	032 (b)	Taps
		033 (b)	Threads (Principles, types, terminology)
		034 (b)	Tap and diestocks
		035 (b)	Tap drills (Tables)
		036 (b)	Triangular threads (Characteristics, tables)
		037 (b)	Vernier callipers (Reading in fractions of an inch)
15/MF	Filing concave and convex surfaces	038 (b)	Jigs
		039 (b)	Checking instruments (Gauges and testers)
		040 (b)	Cast iron (Types, uses and characteristics)

(a) See CBC for Oxyacetylene Welder

(b) See CBC for Lathe-Setter Operator

III - Table of OS's and their corresponding TIS's. Suggested grouping of teaching units.
Occupation: MACHINERY FITTER (contd.)

OPERATION SHEETS - OS		TECHNOLOGICAL INFORMATION SHEET - TIS	
Ref.	Operation	Ref.	Theme
16/MF	Horizontal machining of flat and parallel surfaces on the shaper	041	The planing and shaping machine (Parts and characteristics)
		042 (b)	Cutting tools (Types, cutting methods and wedge angles)
		043 (b)	The dial indicator
		044 (b)	The micrometer (Functioning and reading)
17/MF	Vertical machining of a flat surface on the shaper	045 (a)	Steel alloys
		046 (b)	Advance in machine tools
		047 (b)	Cutting velocity (Difinitions, units and applications)
		048 (b)	Cutting tools (Angles and tables)
18/MF	Cutting angular flat surfaces on the shaper	049 (b)	Vernier callipers (Smallest reading of 0.05 and 0.02 mm)
		050 (b)	Vernier callipers (Smallest reading)
		051 (b)	The micrometer (Graduation in mm, with vernier)
19/MF	Spring winding (In the vice)	052 (b)	Helical springs
		053	Pliers
20/MF	Sharpening twist drills	054 (b)	The helical drill (Angles)
21/MF	Sawing with the band saw	055	Metal-cutting band saws
		056	The reciprocating power hack saw
		057	Saw blades for machines
		058 (a)	Tightening tools

(a) See CBC for Oxyacetylene Welder
(b) See CBC for Lathe Setter-Operator

III - Table of OS's and their corresponding TIS's. Suggested grouping of teaching units.
Occupation: MACHINERY FITTER (contd.)

OPERATION SHEET - OS		TECHNOLOGICAL INFORMATION SHEET - TIS	
Ref.	Operation	Ref.	Theme
22/MF	Threading with stock and die (By hand)	059 (b)	Screws, nuts and washers
		060	The screwdriver
		061 (b)	Dies
23/MF	Counterboring	062	The drilling machine (Hand and floor types)
		063 (a)	Holding devices (Hand press and pressure pliers)
		064	Clamping devices (Machine vices)
24/MF	Straight reaming with a fixed hand reamer	065 (b)	Reamers (Types and uses)
		066 (a)	Non-ferrous metals (Alloys)
		067 (b)	The micrometer (Graduation in inches)
25/MF	Machining straight grooves	068	Cutting speed of the shaper (Tables)
26/MF	Cutting grooves with the shaper	069 (b)	Graduated rings in machine tools (Calculations)
27/MF	Machining "T" slots	070	The shaper (Ram and automatic feed)
28/MF	Reaming with the taper reamer (By hand)	071 (b)	The micrometer (Graduation in inches with vernier)
29/MF	Reaming with the adjustable reamer	072 (b)	Testing instruments (Go and no go callipers)
		073 (b)	The micrometer (For internal measurements)
		074 (b)	Tolerances (ISO System)
30/MF	Scraping	075	Scrapers (Types and characteristics)
31/MF	Mounting bushings	076	The hand press (Column type)

(a) See CBC for Oxyacetylene Welder
(b) See CBC for Lathe Setter-Operator

III - Table of OS's and their corresponding TIS's. Suggested grouping of teaching units.
Occupation: MACHINERY FITTER (contd.)

OPERATION SHEETS - OS		TECHNOLOGICAL INFORMATION SHEETS - TIS	
Ref.	Operation	Ref.	Theme
32/MF	Removing and mounting bearings	007	Bearings
		078	Anti-friction bearings and housings
33/MF	Aligning transmission devices	079 (b)	Pulleys and belts
		080 (b)	Lubrication (Systems and grooves)

(a) See CBC for Oxyacetylene Welder

(b) See CBC for Lathe Setter-Operator

OPERATION SHEETS

Filing is reducing or finishing workpieces or surfaces with the help of a metal tool known as a file.
The machine fitter often files a flat surface so as to obtain very precise dimensions when he repairs
or adjusts machinery (Fig. 1).

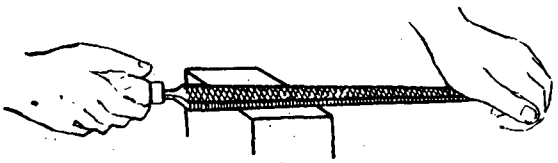

Fig. 1

PROCEDURE

1st Step - *Fix the workpiece in a vice* so that the surface to be filed lies flat. It should lie higher than the jaws of the vice.

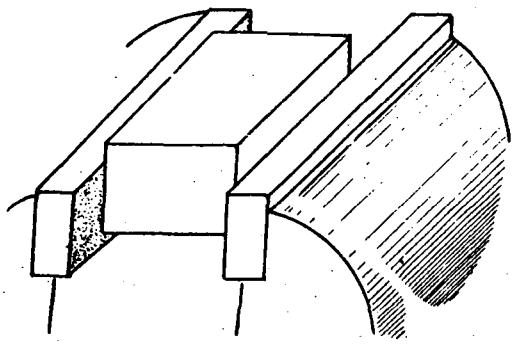

Fig. 2

OBSERVATIONS

1. Before clamping the workpiece see that the vice is at the proper working height (Fig. 3). If necessary, stand on a firm stool or platform, or look for another vice to use.

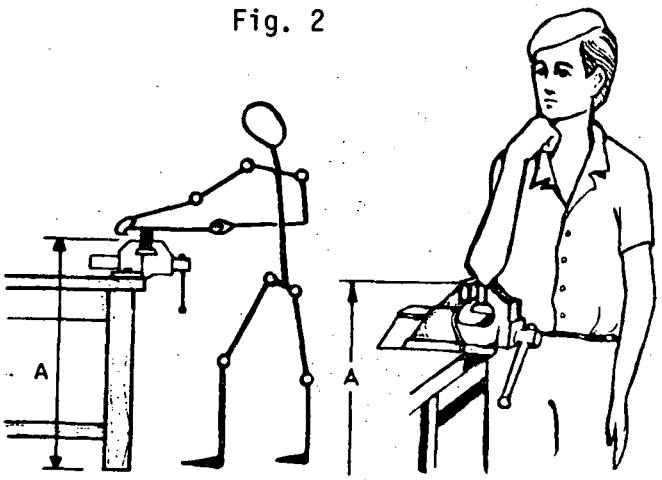

Fig. 3

2. The jaws of the vice should be covered with material that is softer than the workpiece so as to protect the surfaces that are already finished.

2nd Step - *File the surface* thus:

a) Hold the file in the way that Fig. 1 suggests.

CAUTION

TO AVOID ACCIDENTS, BE SURE THAT THE TANG OF THE FILE IS FIRMLY INSERTED IN THE HANDLE.

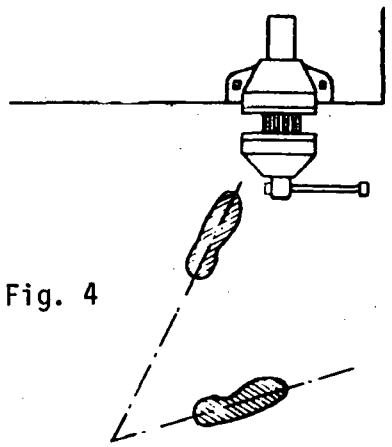

Fig. 4

b) With your feet in the position shown in Fig. 4, rest the file on the workpiece.

c) Begin filing by pressing downwards and forwards with the file. The file should move freely over the piece on the return stroke.

OBSERVATIONS

1. Filing may be done with a straight or slantwise motion (Figs. 5 and 6).

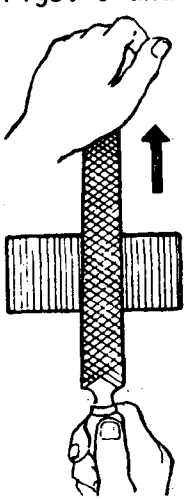

Fig. 5

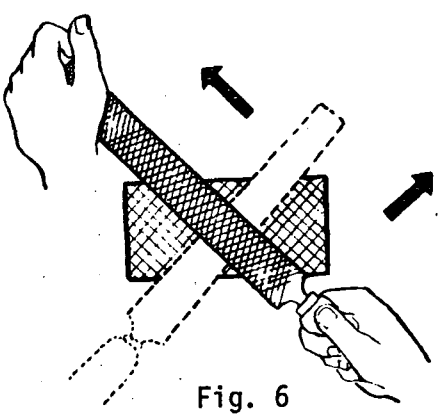

Fig. 6

2. Use the entire length of the file.
3. Try to file at roughly 60 strokes per minute.
4. Only your arms should move.
5. Use a file-card or brush to clean the file (Fig. 7).

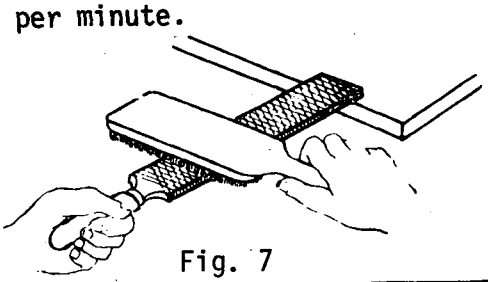

Fig. 7

3rd Step - *Check to see if the surface is flat.* Use a straight-edge as shown in Fig. 8, the surface plate or layout table (Fig. 9).

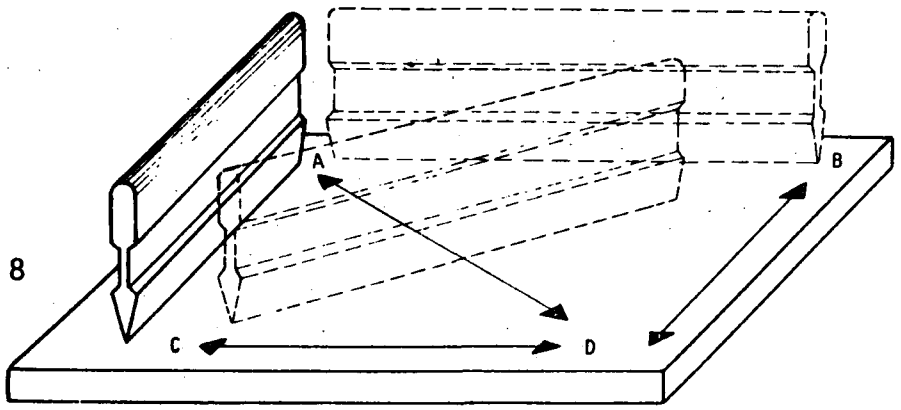

Fig. 8

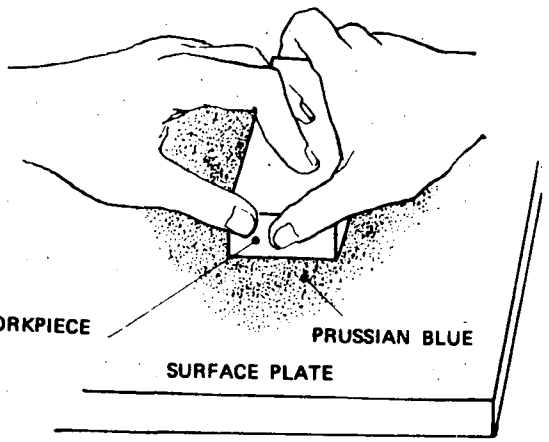

Fig. 9

OBSERVATIONS

- When checking, maintain gentle contact with the straight-edge without sliding the edge on the surface checked.
- Use Prussian blue or red lead and check by rubbing the workpiece against the surface of the layout table.

CBC

OPERATION:
DRAWING STRAIGHT LINES ON FLAT SURFACES

This operation consists of tracing straight lines in different positions on a plane. This tracing is done through previously determined points, taking an edge or a face as a reference, and using different instruments (see below). These lines serve as a guide or reference. They are traced before carrying out most of the operations in the construction of machine parts.

PROCEDURE

1st Step - *Colour the face of the workpiece.*

OBSERVATIONS

1. The surface should be clean, smooth and free from grease.
2. Use chalk, varnish, white lead or copper sulphate as colouring.

CAUTION

BE CAREFUL! COPPER SULPHATE IS A DEADLY POISON.

2nd Step - *Mark the points* through which the straight lines will pass (Fig. 1).

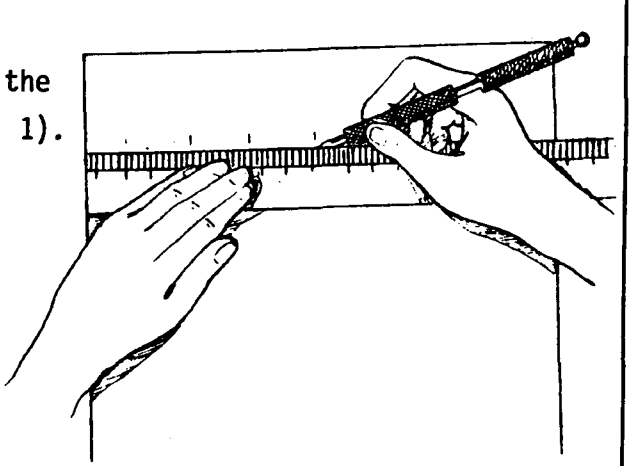

Fig. 1

3rd Step - *Place the base of the square* on the reference surface (Fig. 2).

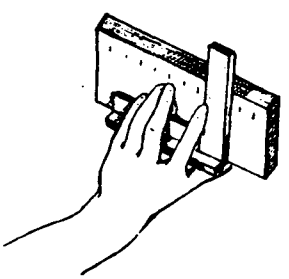

Fig. 2

4th Step - *Use a scriber to draw the straight lines* through the points already marked (Fig. 3).

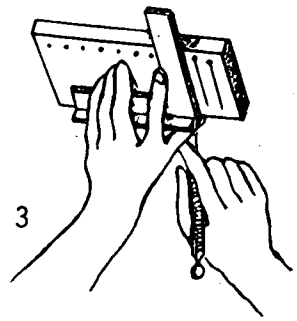

Fig. 3

OBSERVATIONS

1. The lines should be thin, well-defined, and drawn with a single stroke.

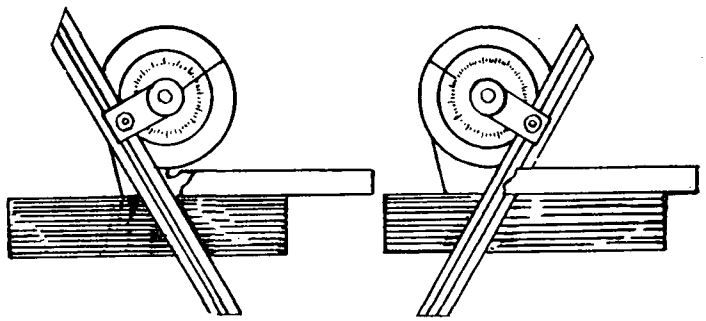

Fig. 4

2. Draw diagonal lines in the same manner, using the combination set (Fig. 4).

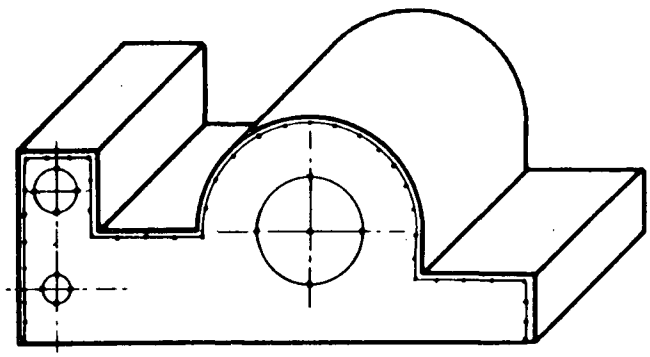

Fig. 5

3. Use a prick-punch to dot along the lines of cast iron pieces prior to dressing (Fig. 5).

CBC

OPERATION:

DRAWING ARCS OF CIRCUMFERENCE

This is the operation by means of which arcs of a circumference of given radius are drawn with an instrument known as a compass or spring-dividers. They are made to rotate on one leg at a fixed point chosen as the centre (Fig. 1).

This is a basic step in the construction of workpieces in general and serves as a guide in carrying out other operations.

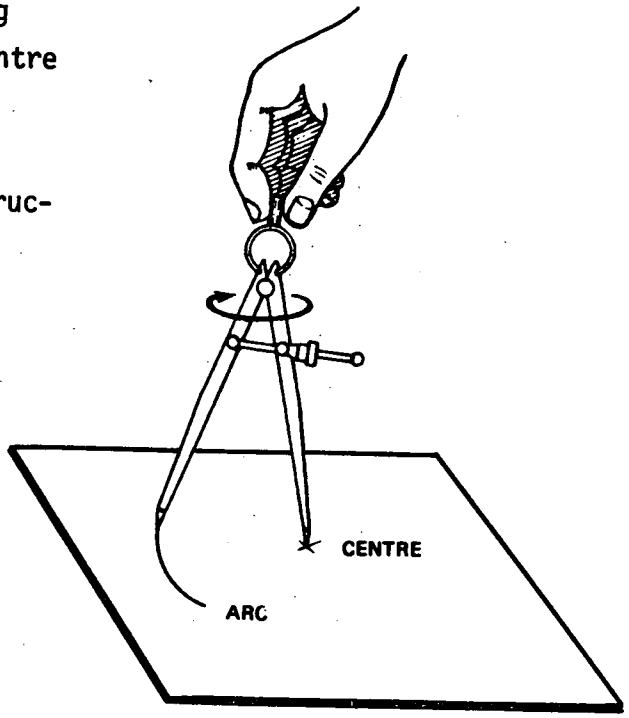

Fig. 1

PROCEDURE

1st Step - *Colour the surface of the worpiece.*

2nd Step - *Locate the centre.*

OBSERVATION

The certre of the arc of a circumference is given by the point where two lines intersect.

3rd Step - *Mark the centre* thus:

a) Rest the tip of the punch on the selected spot. Lean the punch forward so that it will be easier to find the point of intersection (Fig. 2).

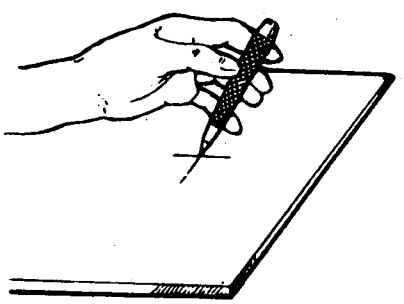

Fig. 2

b) Raise the punch to a vertical position and tap it lightly with a hammer (Fig. 3).

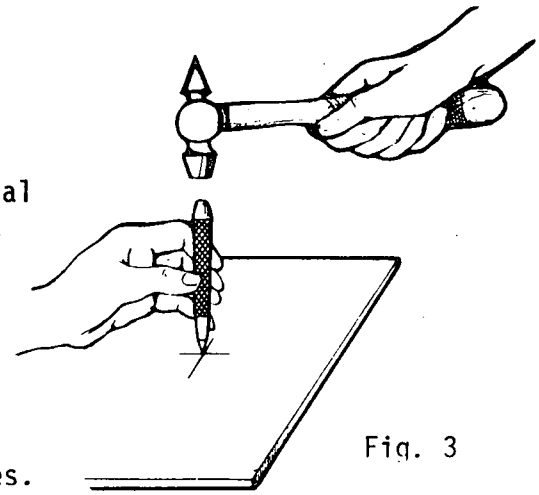

Fig. 3

OBSERVATION
See that the point is directly on the intersection of the lines.

4th Step - *Draw the a* thus:

a) Open the dividers to the correct measurement (Fig. 4).

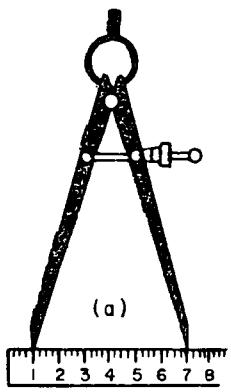

Fig. 4

b) Place one leg of the dividers on the point marked as the centre. Draw the arc by rotating the other leg in a clockwise direction (Fig. 5).

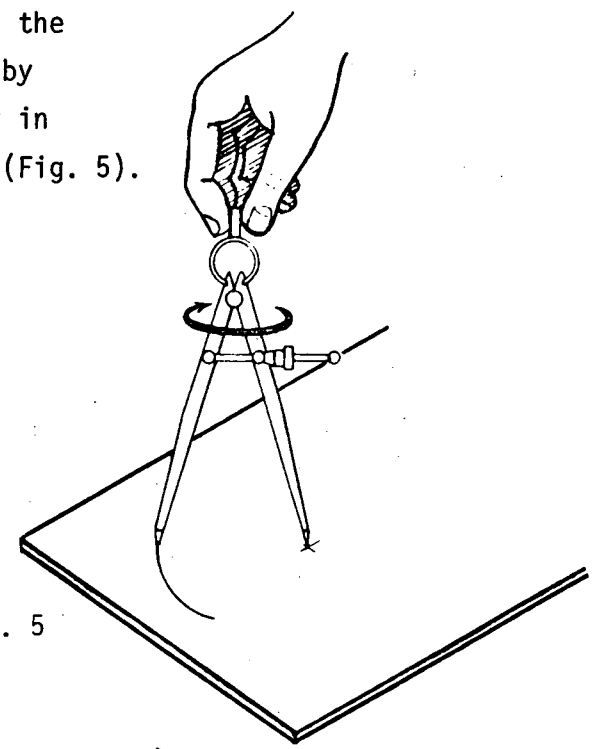

Fig. 5

When filing thin laminated or thin metals (up to 4 mm approximately), the operation varies because of the need to support the workpiece. To do this, use pieces of wood, squared sections, clamps and nails.
These procedures will apply when making templates and fittings. This operation includes two different aspects: one, filing edges and the other, filing surfaces.

PROCEDURE

1st Step - *Mark guidelines.*
2nd Step - *Clamp the material* so that it will not vibrate during filing (Figs. 1 and 2).

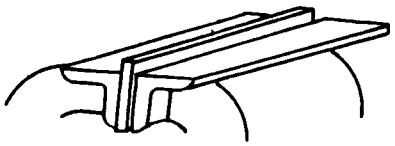

Fig. 1

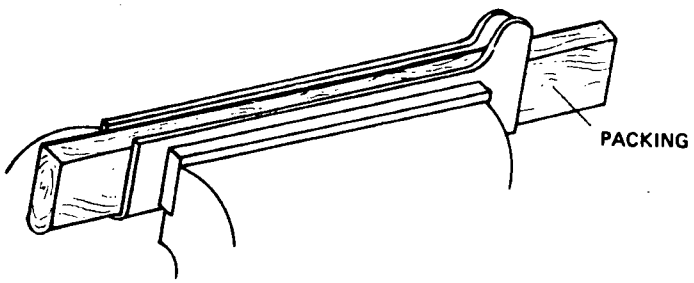

Fig. 2

Fig. 1 Piece held between squared sections
Fig. 2 Piece strengthened with a wooden packing piece.

3rd Step - *File, making sure that the piece does not vibrate.*

OBSERVATION
To eliminate vibrations and to obtain the best results, file in the manner shown in Fig. 3.
The file should move diagonally across the workpiece.

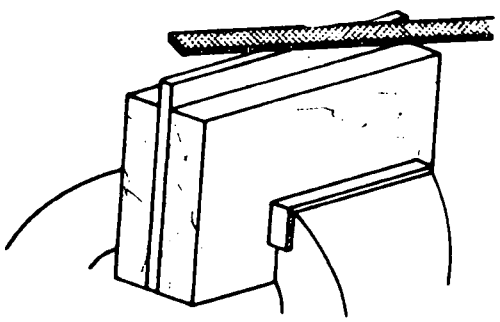

Fig. 3

4th Step - *Check* the filed surface with a straight-edge.

Fig. 4

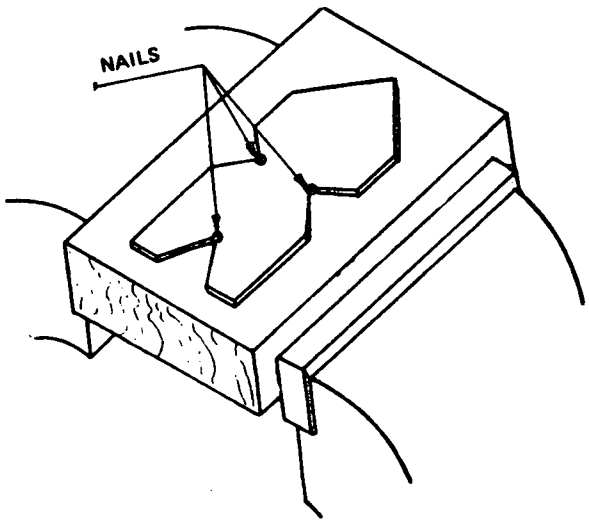

Fig. 6

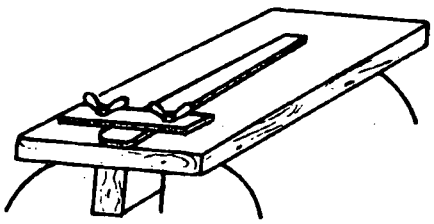

Fig. 5

OBSERVATION

When filing surfaces of sheet-metal, the workpiece should be pinned to a wooden prop, as shown in Figs. 4, 5, and 6.

CBC

OPERATION:
MOULDING AND BENDING THIN SHEET-METAL

REF. OS.05/MF | 1/2

Caribbean

Moulding thin sheet-metal (up to approximately 4mm thick) is to change its shape, which is usually flat, forming angles, curves, and combinations of these.

To do this, a vice, hammers or mallets aided by mandrels or shoes are used to obtain the desired shape (Fig. 1).

The workpieces obtained by this process are used either by themselves, with other pieces, or in assemblies.

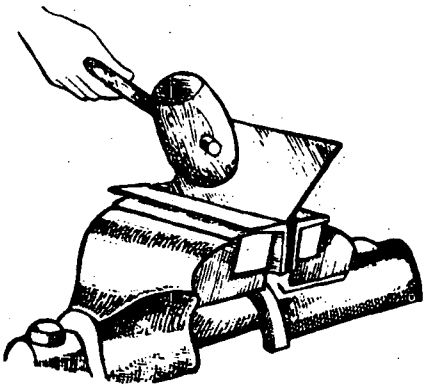

Fig. 1

PROCEDURE

1st Step - *Clamp the workpiece* in the vice, as the guidelines indicate (Fig. 2).

OBSERVATIONS

1. When necessary, use soft jaws.

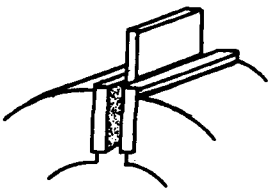

Fig. 2

2. Use accessories when necessary (Figs. 3, 4, and 5).

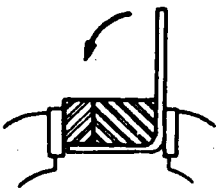

Fig. 3

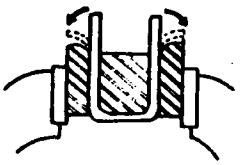

Fig. 4

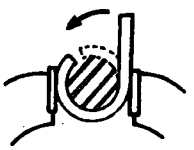

Fig. 5

3. For pieces that are larger than the vice, use squared sections or shoes (Figs. 6 and 7).

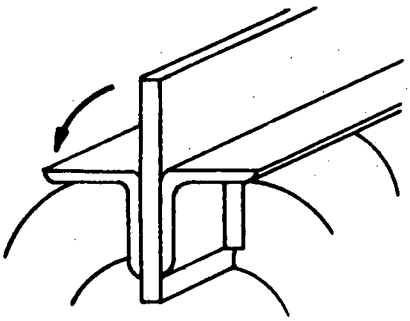

Fig. 6

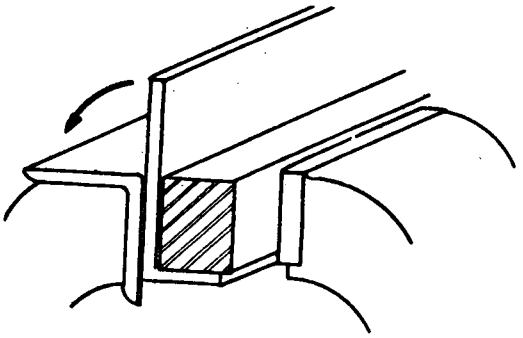

Fig. 7

2nd Step - *Bend and mould to shape.*

OBSERVATION

Several different processes may be used (see below).

CAUTION

BE SURE THAT THE HANDLES OF THE HAMMER AND THE MALLET ARE FIRMLY FITTED, AND THAT THE WORKPIECE AND ACCESSORIES ARE FIRMLY HELD.

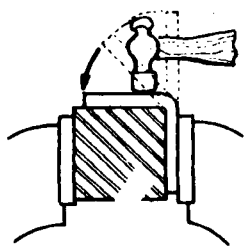

Fig. 8 If the finish is not particularly important, use the hammer directly.

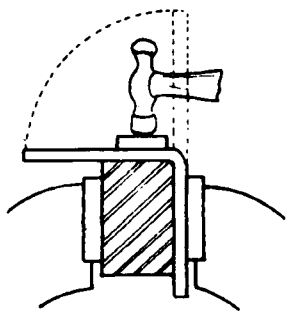

Fig. 9 Use some form of protection so as to avoid any hammer-marks.

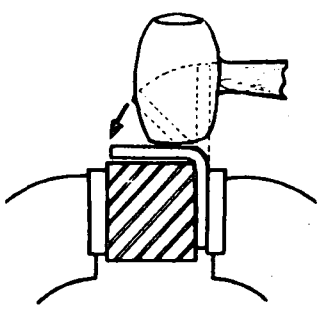

Fig. 10 On very thin sheet-metal or on soft metals, use a mallet.

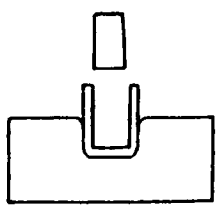

Fig. 11 Where several pieces are required, use a mould.

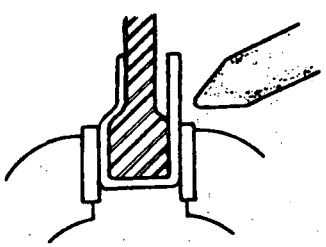

Fig. 12 In special circumstances use a round nose tool.

This is an operation by which holes are made by the rotary motion and feed of a drill fitted in a drilling machine (Fig. 1). Holes are made prior to threading, or when fitting shafts, bushings, screws and rivets in parts that function either by themselves or in conjunction with others.

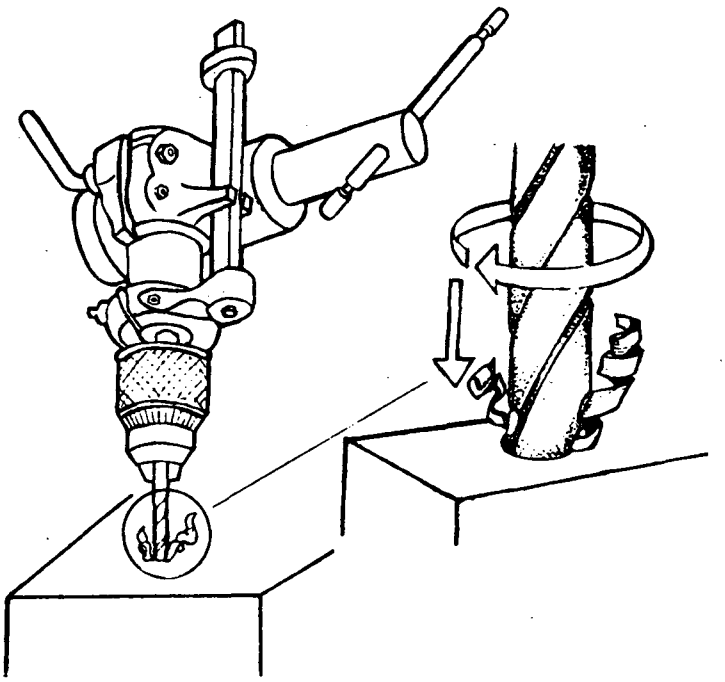

Fig. 1

PROCEDURE

1st Step - *Clamp the workpiece.*

OBSERVATION

The manner in which the workpiece is clamped will depend on its size and shape. It may be held in the vice of the drilling machine (Fig. 2), or on the table with vice grips, clamps, or other means (Figs. 3 and 4).

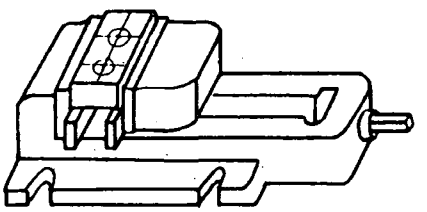

Fig. 2

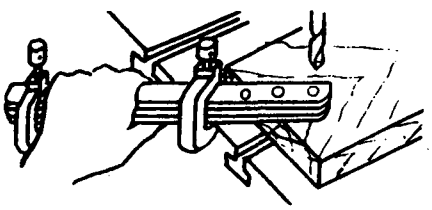

Fig. 3

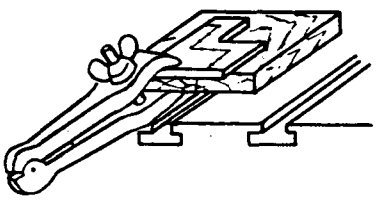

Fig. 4

CAUTION

SO AS NOT TO BORE THROUGH THE DRILL-TABLE, PUT A PIECE OF WOOD BETWEEN THE WORKPIECE AND THE TABLE (FIG. 4).

2nd Step - *Fit the drill* into the chuck (Fig. 5).

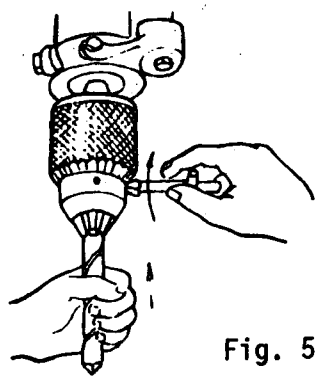

Fig. 5

OBSERVATIONS

1. Before fitting the drill, use a vernier calliper to measure its diameter, and check for sharpness.

2. In the case of drills with taper shank, fit them directly into the spindle.

3. When drilling thin metal select a suitable drill and sharpen it.

3rd Step - *Adjust* the rotation and the feed.

4th Step - *Adjust the cutting depth* thus:

a) Using the feed handle (Fig. 6), position the drill over the work-piece.

b) Turn the adjusting nut so that its distance from the stop is equal to the length of the tip of the drill plus the depth of the hole (Fig. 7).

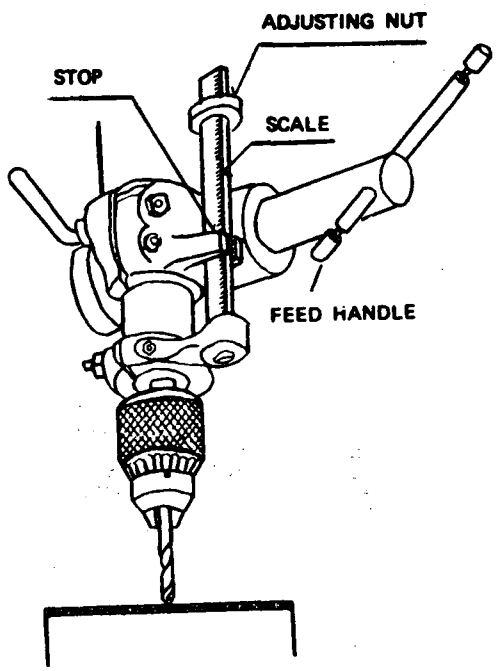

Fig. 6

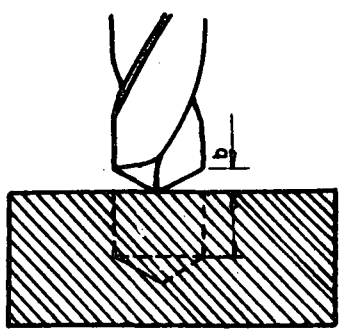

Fig. 7

OBSERVATION

When the hole goes all the way through the workpiece, allow an extra 2 or 3 millimetres to make sure that the drill will break through.

5th Step - *Drill the hole* thus:

CAUTION

THE DRILL AND THE WORKPIECE MUST BE SECURELY HELD.

a) Use the feed handle to bring the drill close to the workpiece.
b) Centre the drill over the point to be drilled.
c) Start the machine.
d) Drill until the hole is made.

OBSERVATIONS

1. Choose the proper coolant for the material being drilled.
2. As each hole nears completion, the feed must be slow.

This operation consists of using a countersink drill to give a conical shape to the top of a hole made by a drilling-machine. Such joining parts as screws and rivets with conical-shaped heads can thus be embedded (Fig. 1).

PROCEDURE

1st Step - *Clamp the workpiece.*

2nd Step - *Prepare the machine for use* thus:

a) Fix the countersink drill in the chuck.

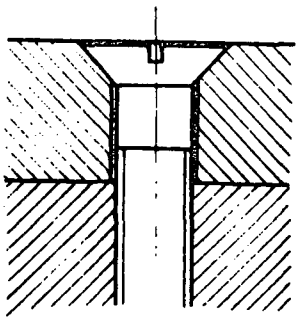

Fig. 1

OBSERVATION

The countersink drill should have the same angle as the head of the screw or rivet.

b) Adjust the rotation speed.

3rd Step - *Countersink the hole* thus:

a) Adjust the depth of countersinking.

b) Align the countersink drill with the hole.

OBSERVATIONS

1. The depth of countersinking should be determined by a trial run on a separate piece of material.
2. For precision work, use a countersink drill with a guide (Fig. 2).

c) Start the machine

d) Countersink (Figs. 3 and 4).

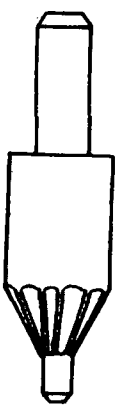

Countersink drill with guide

Fig. 2

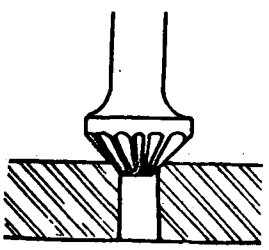

Fig. 3

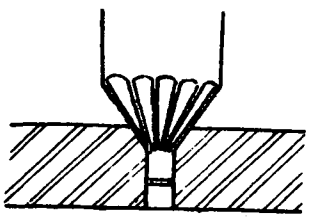

Fig. 4

OBSERVATIONS

1. The feed must be slow.

d. Use the proper coolant for the material being drilled.

4th Step - *Check the countersinking* against the screw being used or with a vernier calliper (Figs. 5 and 6).

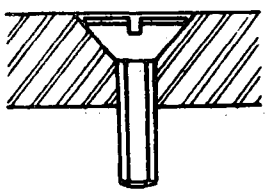

Fig. 5

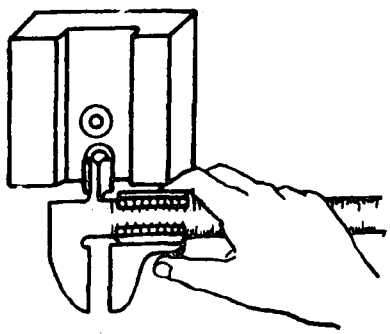

Fig. 6

CBC

OPERATION:
USING A SURFACE GAUGE

This operation consists of drawing lines parallel to a reference surface on which the gauge rests (Fig. 1). The surface guage is mostly used to locate the centres of workpieces and to mark cuts and grooves. This is an important aspect of the fitter's work for on this exercise depends the success of numerous machining operations.

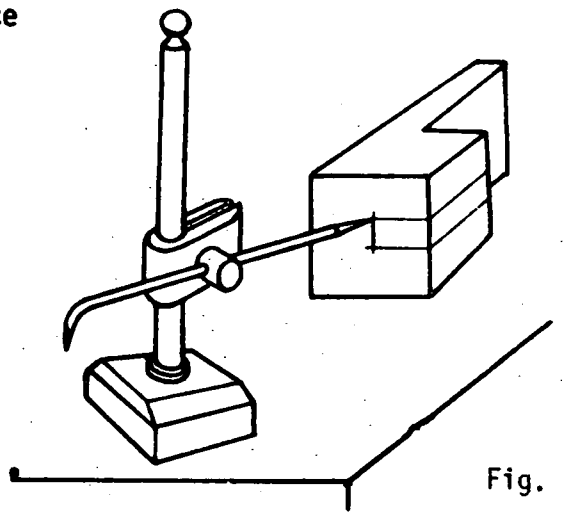

Fig. 1

PROCEDURE

I DRAWING PARALLELS TO A REFERENCE SURFACE

1st Step - *Colour the surfaces to be marked.*

2nd Step - *Position the workpiece.*

OBSERVATIONS

1. If the piece has a flat surface that can serve as a reference, place it directly on the surface plate (Fig. 2).

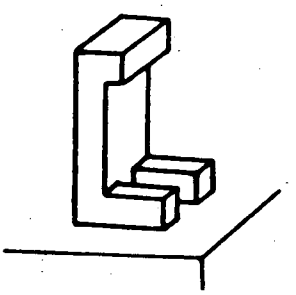

Fig. 2

2. If the piece does not have a suitable reference surface, hold it with an angle plate (Fig. 3).

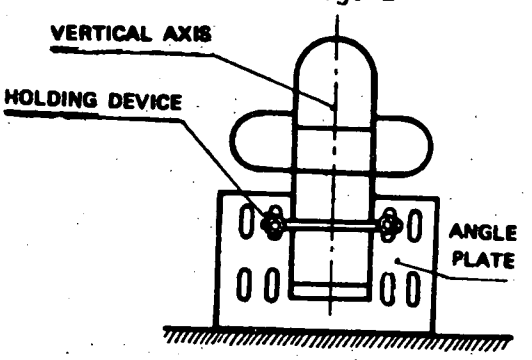

Fig. 3

3. For pieces with no reference surface at all, use parallel strips and/or jacks as supports (Fig. 4).

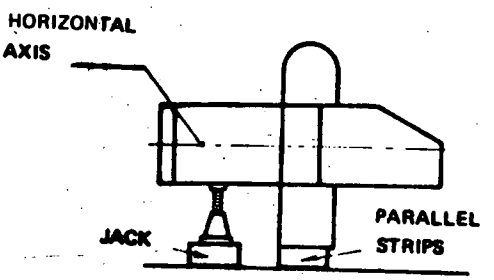

Fig. 4

4. Use V-blocks to support cylindrical pieces (Fig. 5).

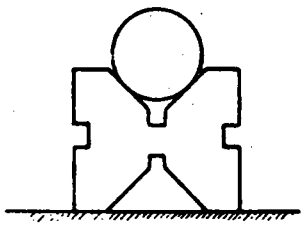

Fig. 5

3rd Step - *Prepare the surface gauge* thus:

a) Set the marking-height either by measurement (Fig. 6) or against a reference-point (Fig. 7).

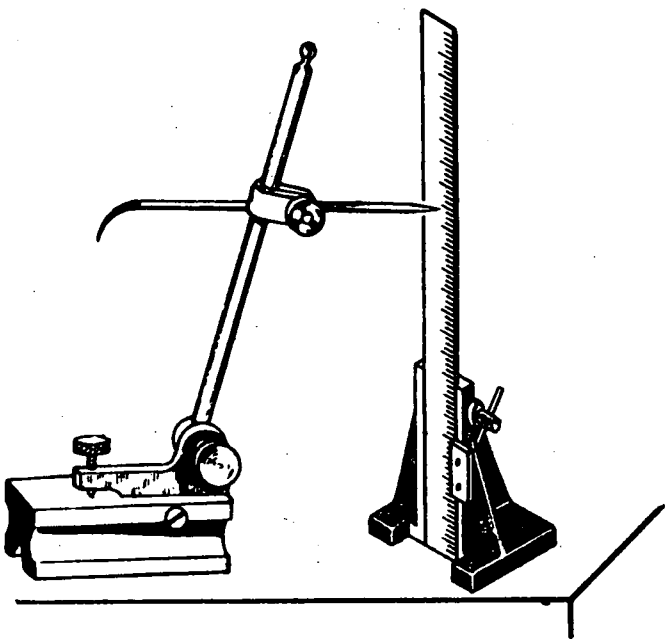

Fig. 6

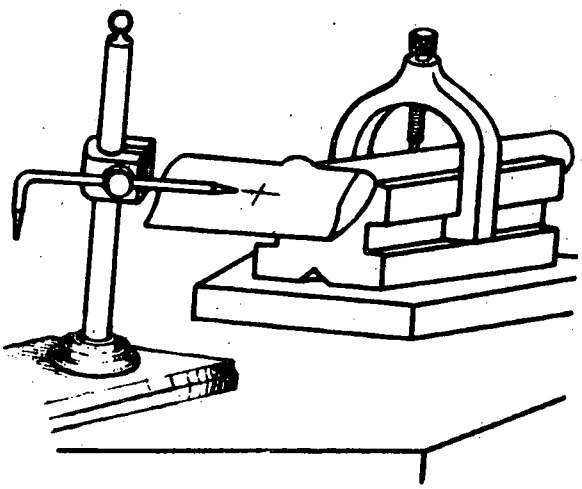

Fig. 7

OBSERVATION

For more precise measuring, use vernier height gauge.

4th Step - *Mark the piece* thus:

a) Position the surface gauge.

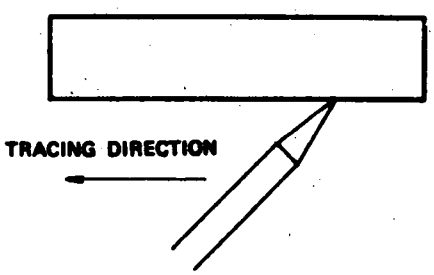

OBSERVATION

Keep the scriber tilted in the tracing direction (Fig. 8).

Fig. 8

b) Press down on the surface plate and trace.

OBSERVATION

The reference surface may be horizontal, vertical, or inclined depending on which is most convenient (Figs. 9 and 10).

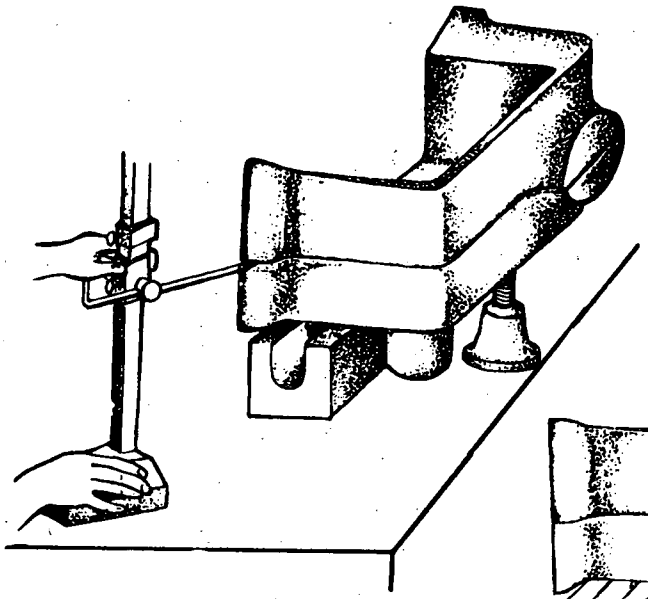

Fig. 9

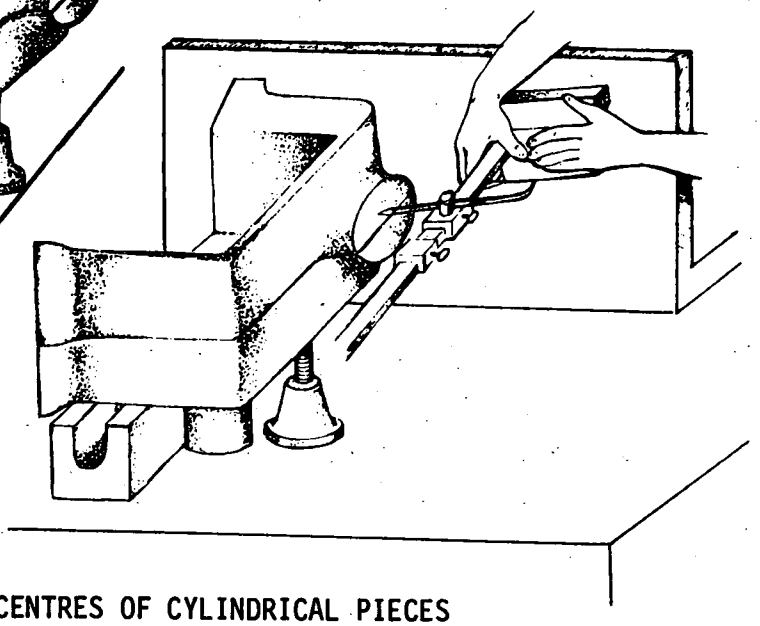

Fig. 10

II LOCATING THE CENTRES OF CYLINDRICAL PIECES

1st Step - *Put the piece on the V-block* (Fig. 11).

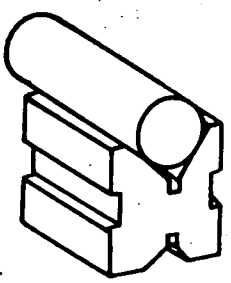

Fig. 11

2nd Step - *Set the scriber above the centre* at roughly half the distance along the radius (Fig. 12).

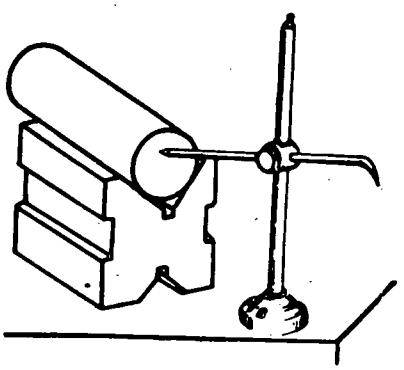

Fig.12

3rd Step - *Trace the first line* (Fig. 13).

4th Step - *Turn the piece* 180° and trace a second line (Fig. 14).

5th Step - *Turn the piece 90° and trace a third line* (Fig. 15).

6th Step - *Turn the piece 180° and trace a fourth line* (Fig. 16).

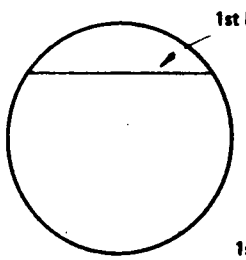

Fig. 13

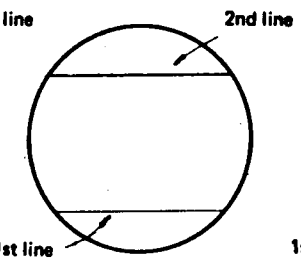

Fig. 14

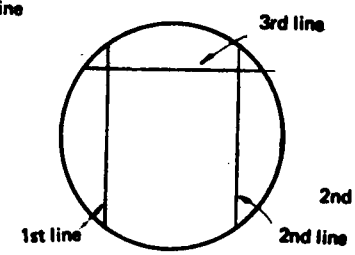

Fig. 15

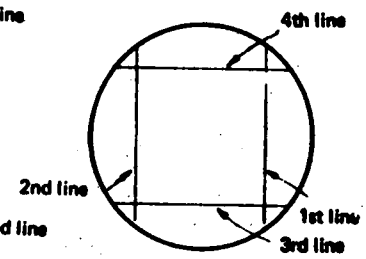

Fig. 16

7th Step - *Adjust the scriber and trace a line through the intersections* at A and B (Fig. 17).

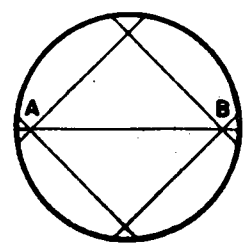

Fig. 17

8th Step - *Turn the piece 90° and trace* (Fig. 18).

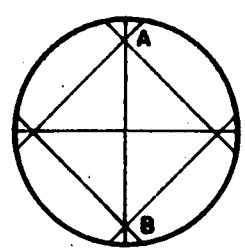

Fig. 18

CBC

OPERATION:
FILING FLAT PARALLEL SURFACES

This is a manual operation in which a file is used to obtain flat, parallel surfaces. Use a surface gauge, a vernier calliper, a micrometer or dial indicator depending on the level of precision required. This filing is usually done when making dies, assembling and fitting.

PROCEDURE

1st Step - *File one surface* until it is flat enough to serve as a reference for the other surface.

OBSERVATION
Remove as little material as possible.

2nd Step - *Mark the piece* thus:
a) Rest the filed surface on the surface plate.
b) Mark all around the piece with the surface gauge so as to have a reference line (Fig. 1).

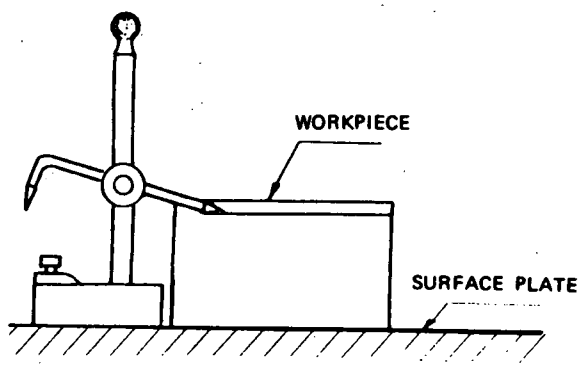

Fig. 1

CAUTION
BE CAREFUL NOT TO HURT YOURSELF WITH THE POINT OF THE SCRIBER.

3rd Step - *File away the excess material* from the other side, using the reference line as a guide.

4th Step - *Check to see if the faces are parallel*, using a vernier calliper (Fig. 2).

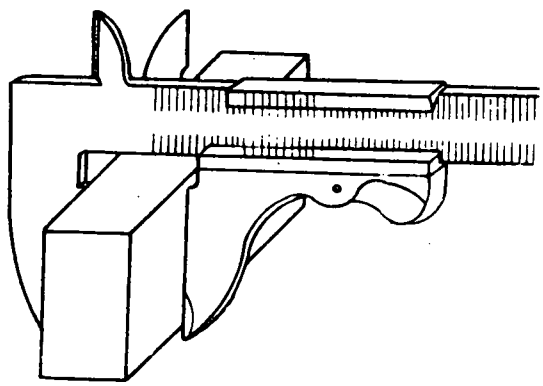

Fig. 2

OBSERVATION

For workpieces which require greater precision, use a dial indicator (Fig. 3) or a micrometer (Fig. 4).

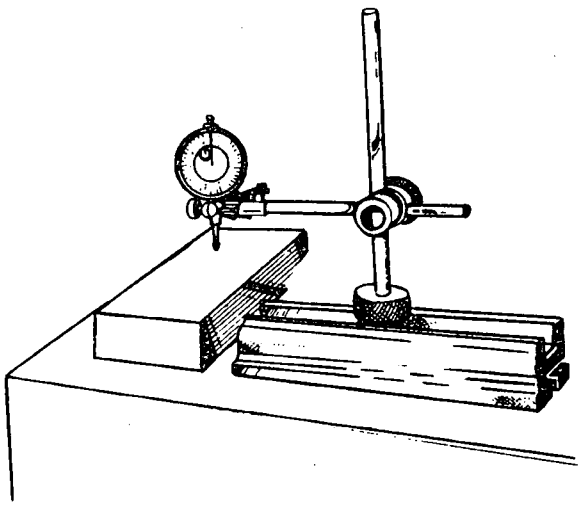

Fig. 3

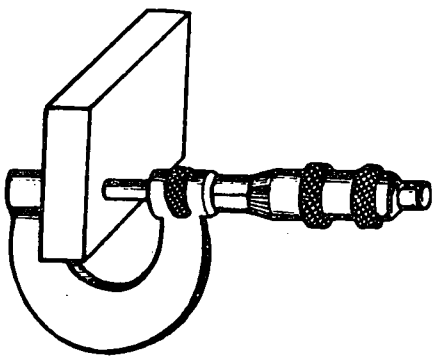

Fig. 4

CBC

OPERATION:
FILING ANGULAR FLAT SURFACES

This is a filing operation by which surfaces with right, acute or obtuse angles can be obtained. This serves various purposes, e.g. to make guides of varying angles, dovetails, templates, wedges and machine parts in general.

PROCEDURE

1st Step - *Clamp the piece* and file the reference surface.
2nd Step - *Trace the desired angle* (Figs. 1 and 2).

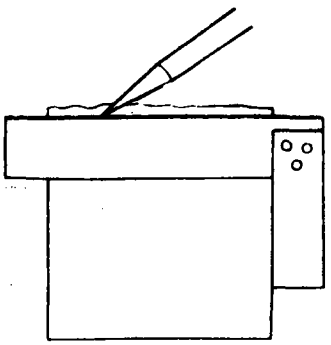

Fig. 1 Tracing with a square

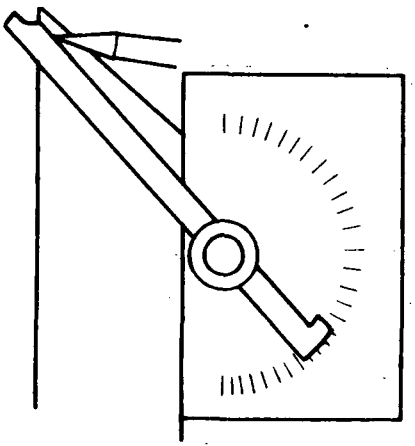

Fig. 2 Tracing with a protractor

3rd Step - *File away the excess material,* keeping to the reference line.

OBSERVATION

If there is a lot of excess material, cut some off before filing.

4th Step - *Finish filing and check the flatness and the angle* of the filed surface (Figs. 3, 4, 5, and 6).

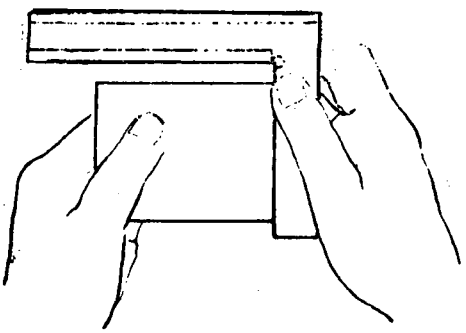

Fig. 3 Checking squared surfaces

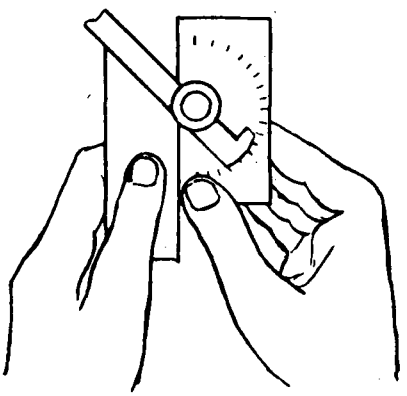

Fig. 4 Checking surfaces with a protractor

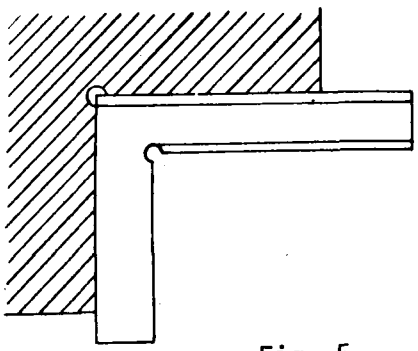

Fig. 5

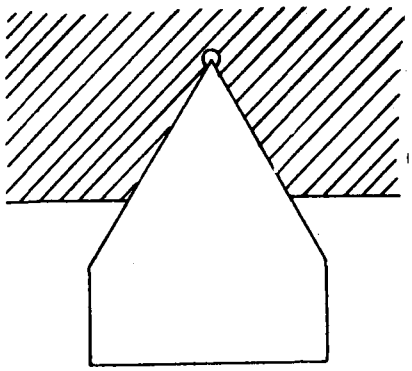

Fig. 6
Checking with an angle gauge

OBSERVATION

When the workpieces are fairly thick and right-angled, check the squareness of the filed surfaces by using a square or test cylinder (Figs. 7 and 8) on a surface plate.

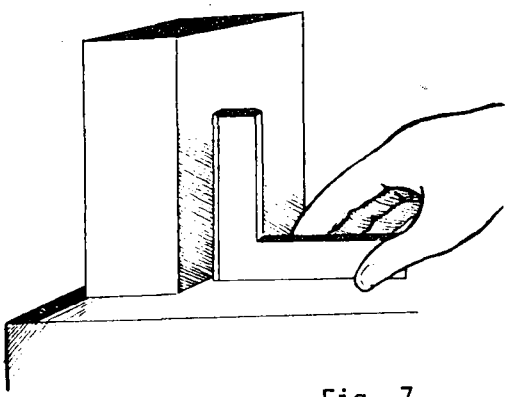

Fig. 7

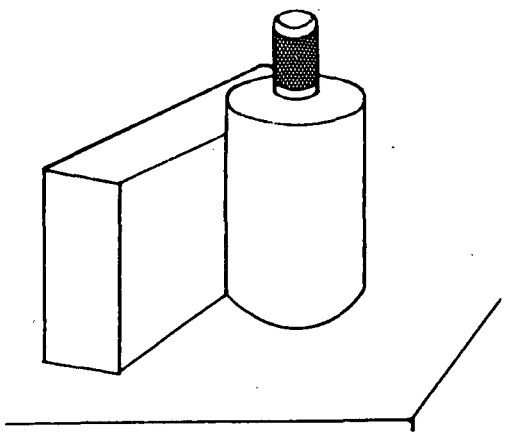

Fig. 8

CBC

OPERATION:
USING A HACK-SAW

This is an operation by which a given stock can be cut using the hack-saw (Fig. 1).
It is widely used in the workshop and often done before other operations.

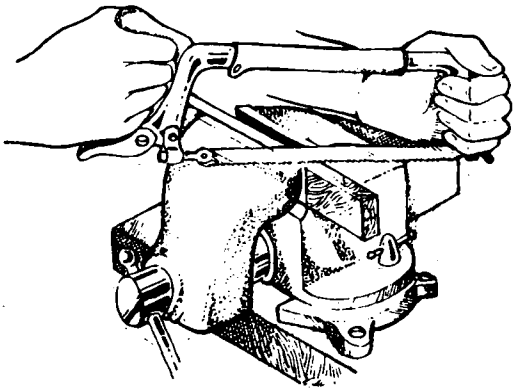

Fig. 1

PROCEDURE

1st Step - *Prepare the saw* thus:

a) Select a blade to suit the type and thickness of the stock.
b) Fit the blade to the frame with the teeth facing forwards (Fig. 2).

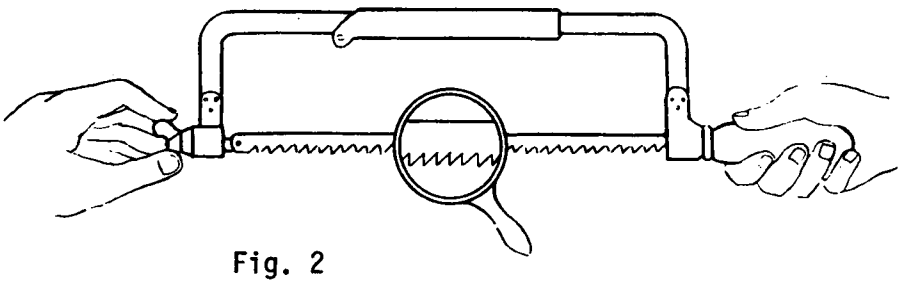

Fig. 2

c) Tighten the blade by turning the screw by hand (Fig. 2).

2nd Step - *Mark* the material *and clamp* it in the vice.

OBSERVATIONS

1. Hold the stock so that the part to be cut is towards the right of the operator and close to the jaws (Fig. 3).
2. When sawing thin stocks, use bits of wood, squared sections and other aids to hold them (Figs. 4 and 5).

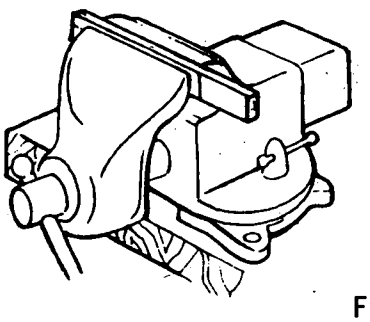

Fig. 3

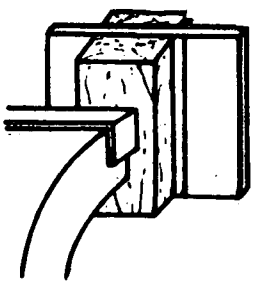

Fig. 4

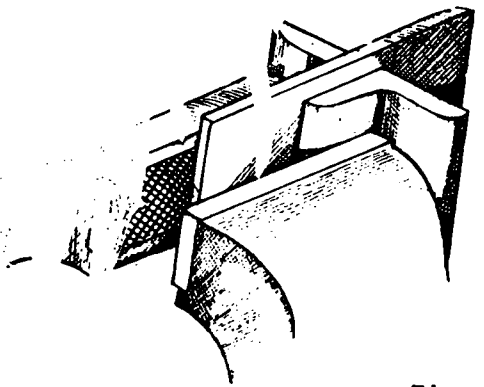

Fig. 5

3rd Step - *Saw.*

OBSERVATIONS

1. Start cutting the line with the saw. Guide it with your thumb (Fig. 6) and tilt it slightly forward to avoid breaking the teeth (Fig. 7).

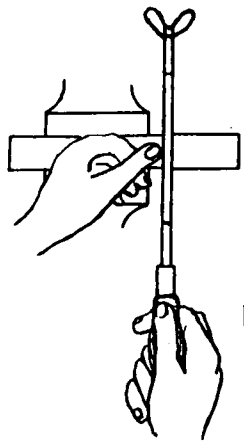

Fig. 6

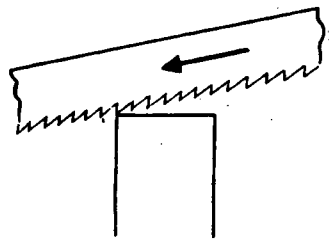

Fig. 7

2. For long cuts, mount the saw blade as shown in Figure 8.
3. The pressure of the saw against the stock should be light, and only on the forward stroke. On the return stroke, let the saw move freely over the material.

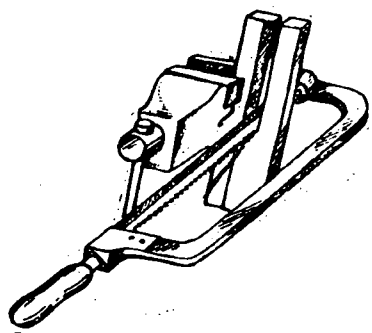

Fig. 8

4. Use the entire length of the saw. Move the saw with your arms alone.
5. Do not saw faster than 60 strokes per minute.

CAUTION

TOWARDS THE END OF THE CUT, REDUCE THE SPEED AND CUTTING PRESSURE TO AVOID ACCIDENTS

4th Step - *Loosen the* saw blade.

CBC

OPERATION:
USING A CHISEL

This is a manual operation which consists of cutting metal stocks with the chisel and hammer (Fig. 1).
This operation is carried out by the fitter when making grooves, cutting rivet heads, making lubrication channels cutting sheet-metal, etc.

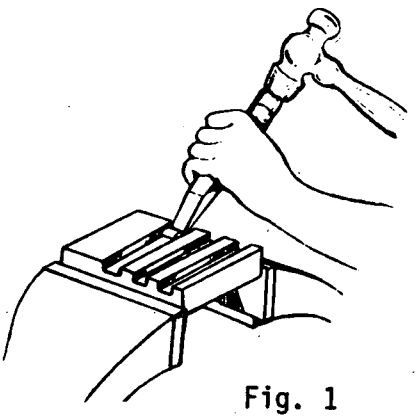

Fig. 1

PROCEDURE

1st Step - *Trace the reference lines,* if necessary (Fig. 2).

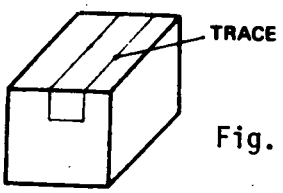

Fig. 2

2nd Step - *Clamp the workpiece.*

OBSERVATION
If the surfaces of the workpiece are already finished, protect them by covering the jaws of the vice with soft jaws.

3rd Step - *Chisel* thus:

a) Select the tool.

OBSERVATION

1. If the grooves are to be finished by filing, leave enough extra material.
2. For very wide grooves, start by cutting several small grooves to make the process easier (Fig. 3).
3. To make the initial cuts easier, and to prevent the cuttings from breaking off at the tracing, sometimes chamfers are cut at both ends (Fig. 4).

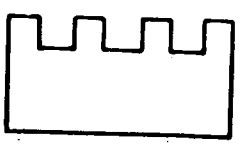

Fig. 3

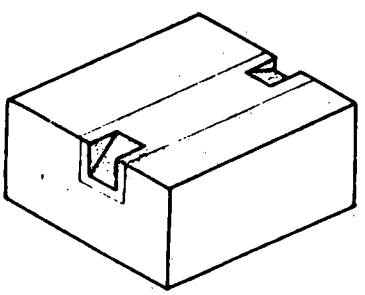

Fig. 4

4. To make chiselling easier, and more accurate, it is advisable to make a saw cut parallel to the tracing (Fig. 5).
5. The shape of the tool used depends on the work to be done (Figs. 3 and 6).

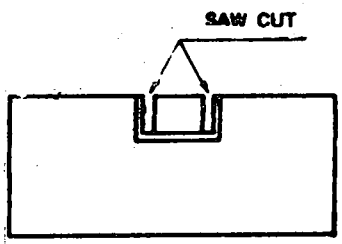

Fig. 5

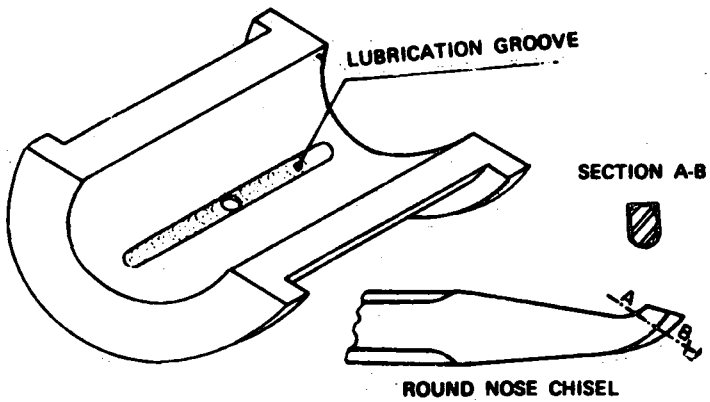

Fig. 6

b) Hold the chisel (Fig. 7) and the hammer (Fig. 8).

Fig. 7

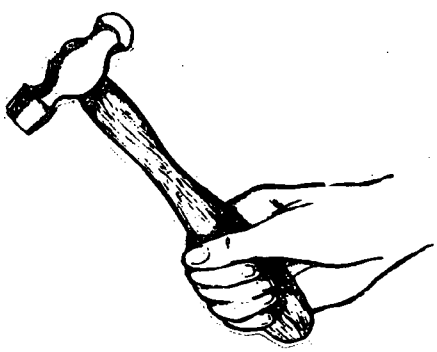

Fig. 8

c) Strike the head of the chisel with the hammer, while watching carefully how the chisel is cutting (Fig. 9).

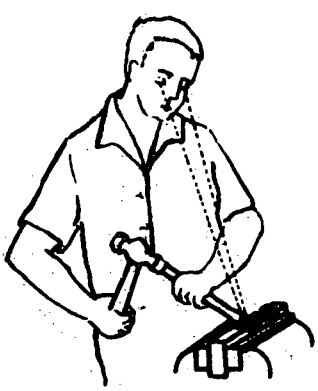

Fig. 9

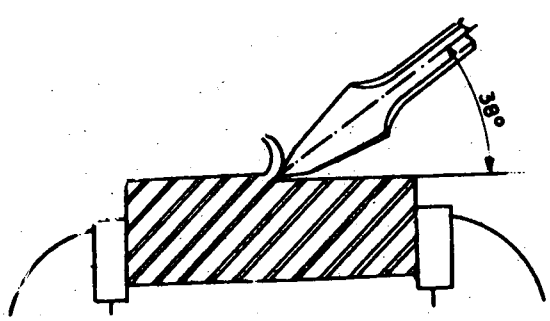

Fig. 10

OBSERVATIONS

1. Hold the chisel in the position shown in Fig. 10.

2. By increasing the angle at which you hold the chisel, you will cut deeper into the stock (Fig. 11). By reducing this angle, the chisel tends to slip out of the stock (Fig. 12).

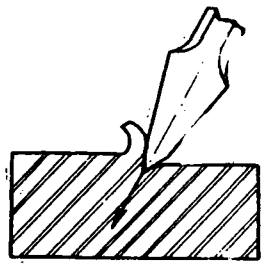

Fig. 11

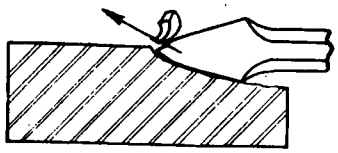

Fig. 12

CAUTION

WHEN NEAR THE END OF THE CUT, LESSEN THE FORCE OF THE HAMMER BLOWS TO AVOID A POSSIBLE ACCIDENT.

3. When cutting sheet-metal, proceed as shown in Figure 13.

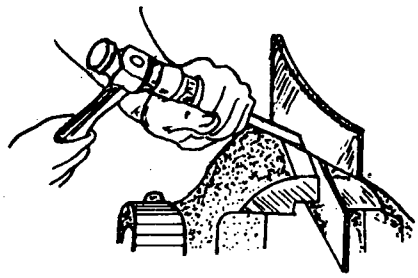

Fig. 13

This is the operation which consists of dressing the cutting edge or the point of tools on the grinding wheel with the purpose of improving penetration and cutting (Fig. 1).

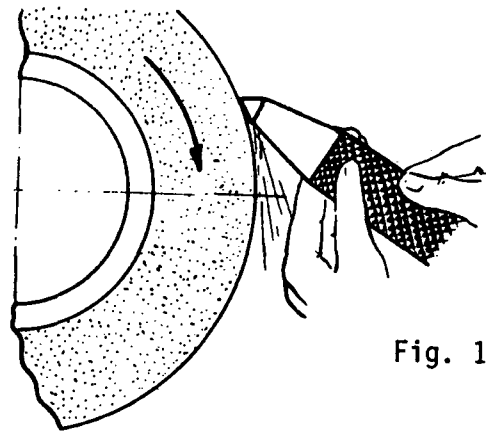

Fig. 1

PROCEDURE

1st Step - *Start the grinding wheel.*

CAUTION

SAFETY GOGGLES MUST BE WORN FOR ALL GRINDING JOBS.

OBSERVATION

Dress the grinding wheel, if necessary.

2nd Step - *Use both hands to hold the tool* in the sharpening position (Fig. 2).

CAUTION

HOLD THE TOOL VERY FIRMLY AND MOVE IT CAUTIOUSLY TOWARDS THE WHEEL (Fig. 3).

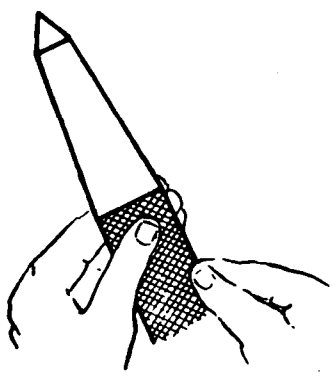

Fig. 2

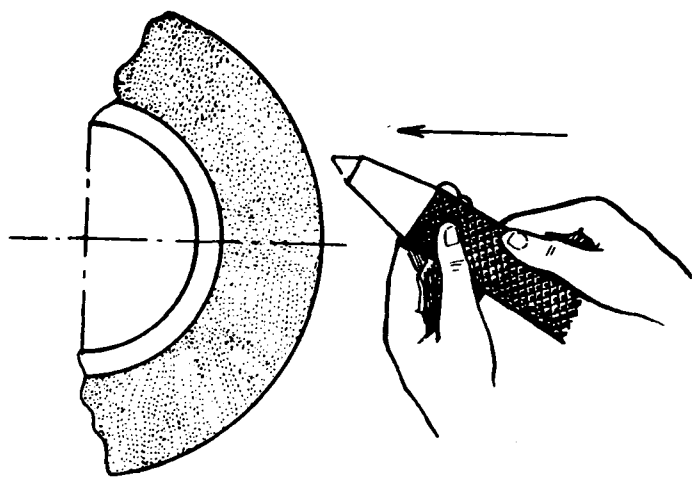

Fig. 3

3rd Step - *Sharpen the tool* thus:

a) Rest the edge of the tool against the grinding wheel above the centre-line (Fig. 4).

b) Move the tool depending on its shape as shown in Figures 5, 6, 7 and 8.

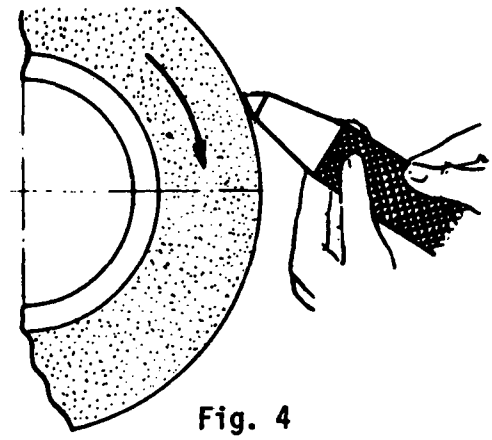

Fig. 4

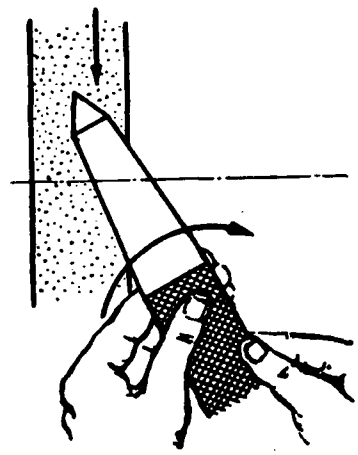

Fig. 5

Fig. 5 Sharpening a centre punch

Fig. 6 Sharpening the point of a divider. Sharpen only the outside face of the point.

Fig. 7 Sharpening a scriber. Rest the scriber very lightly against the grinding wheel.

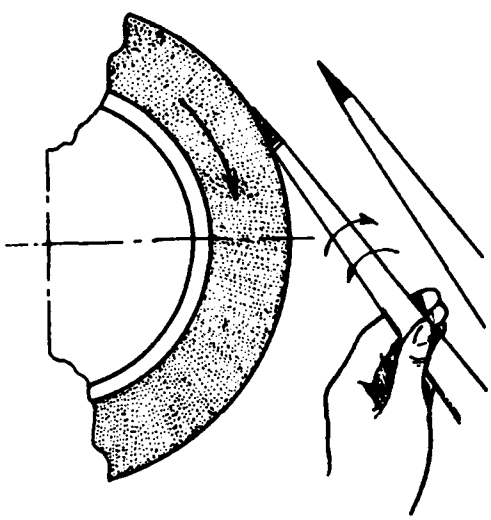

Fig. 6

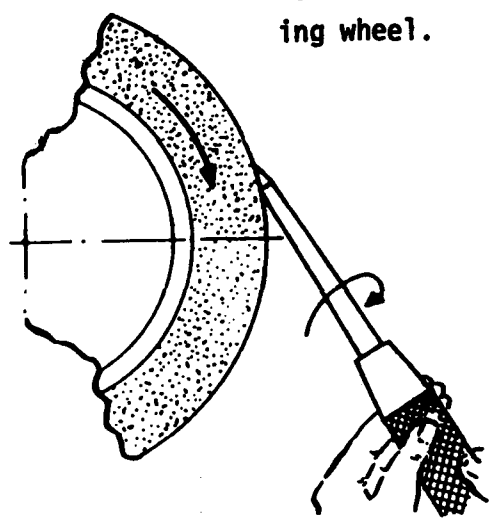

Fig. 7

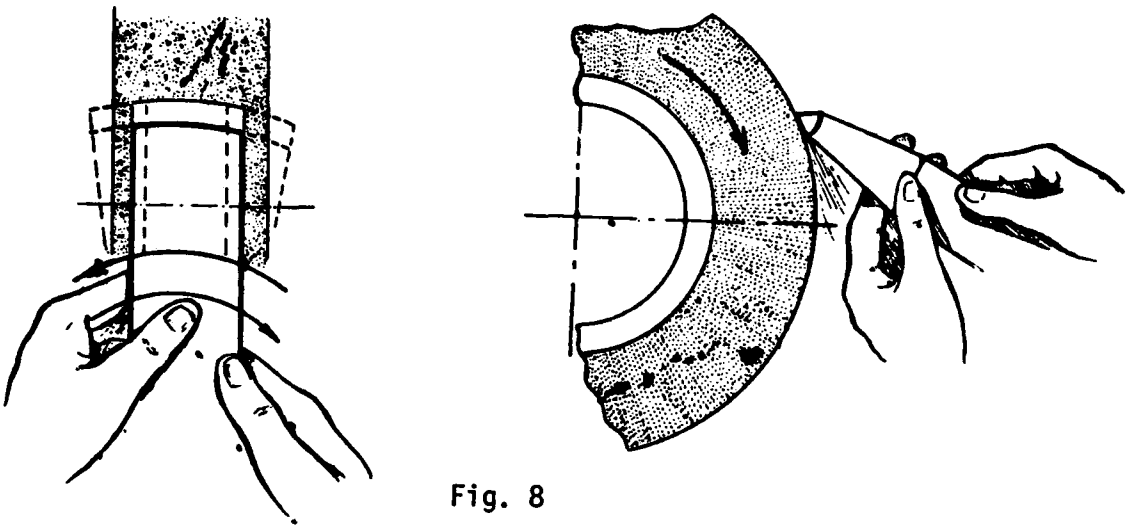

Fig. 8

Fig. 8 Sharpening a chisel

OBSERVATION

Dip tools in water ocassionally to prevent overheating.

CAUTION

BE CAREFUL WITH THE POINTS OF SHARPENED TOOLS

4th Step - *Check the angles* of tools with a template (Fig. 9) or protractor (Fig. 10).

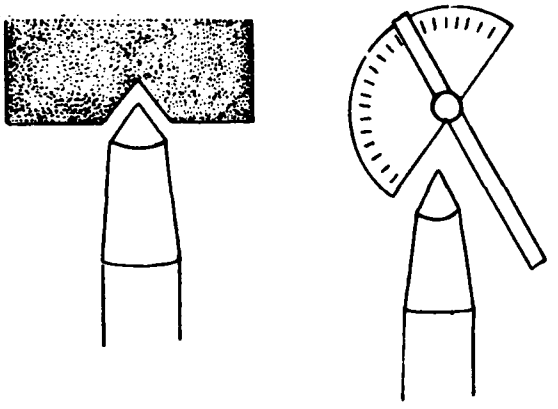

Fig. 9

Fig. 10

CBC	OPERATION: HAND THREADING	REF. OS.14/MF	1/2
		Caribbean	

Internal threading to fit screws of specific sizes is done with a set of taps in previously drilled holes. The taps are gradually pushed down and inwards with a tap-wrench in a back-and-forth circular motion (Fig. 1). This process is applied when making clamps, nuts and machine parts in general.

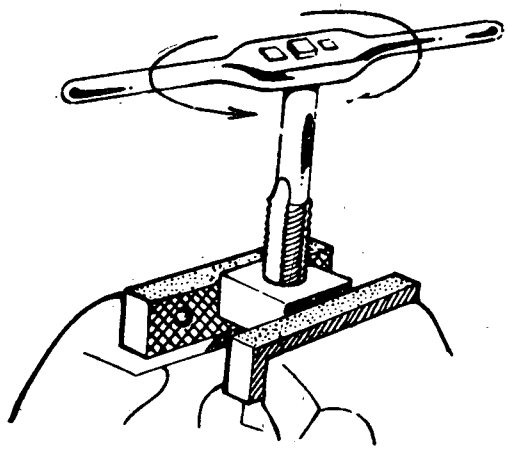

Fig. 1

PROCEDURE

1st Step - *Clamp the workpieces* in the vice.

OBSERVATION

Whenever possible, keep the hole to be threaded in a vertical position.

2nd Step - *Start threading* thus:

a) Take the first tap.

b) Put it in the tap-wrench.

OBSERVATION

The size of the tap-wrench should match the size of the tap.

c) Push the tap into the hole, turning it continually to start threading.

3rd Step - *Check to see that the tap is kept perpendicular (Fig. 2).* Correct the angle if necessary.

4th Step - *Finish passing the first tap through.*

OBSERVATIONS

1. choose the right lubricant for the material being threaded.

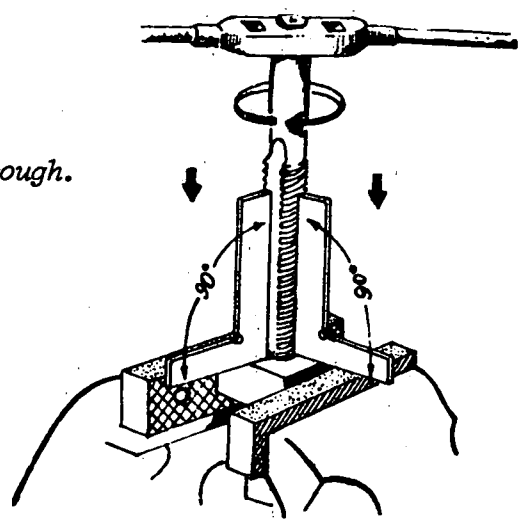

Fig. 2

2. If the cutting becomes difficult, turn the tap in the opposite direction to break off the cuttings (Fig. 3).

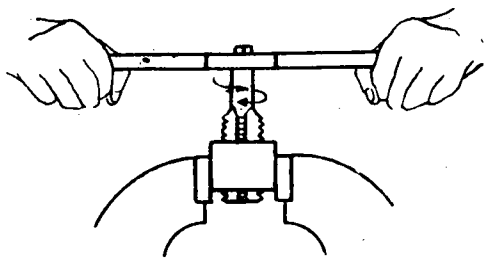

Fig. 3

5th Step - *Finish threading* thus:

a) Use the second tap with a back-and-forth circular movement.

b) Use the third tap with a continuous circular movement.

OBSERVATION

When threading blind holes (Fig. 4) turn the tap with greater care towards the end so as to avoid breakage, and mark the depth of threading.

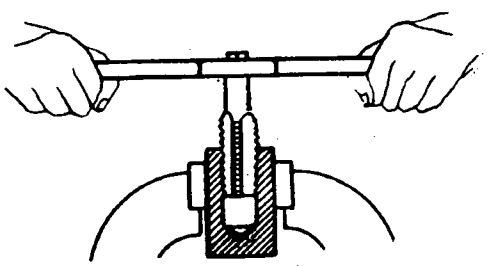

Fig. 4

CBC

OPERATION:
FILING CONCAVE AND CONVEX SURFACES

To produce an externally or internally curved surface manually with the aid of a round, half-round, or flat file and a combination of filing motions (Figs. 1 and 2).

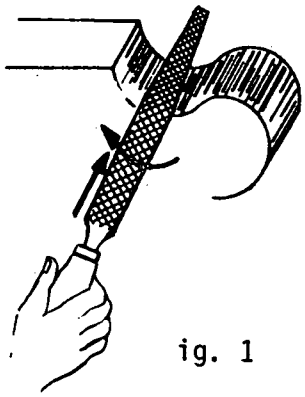

ig. 1

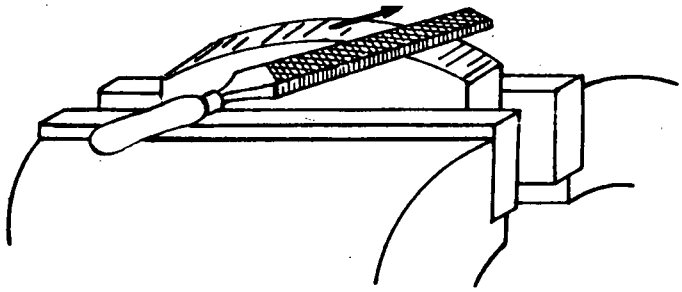

Fig. 2

This operation is mainly for making templates, dies, guides, accessories and keys (Figs. 3 and 4).

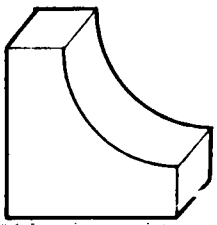

Fig. 3 Template

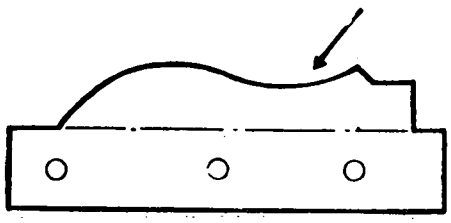

Fig. 4 Guide template for copying lathe

PROCEDURE

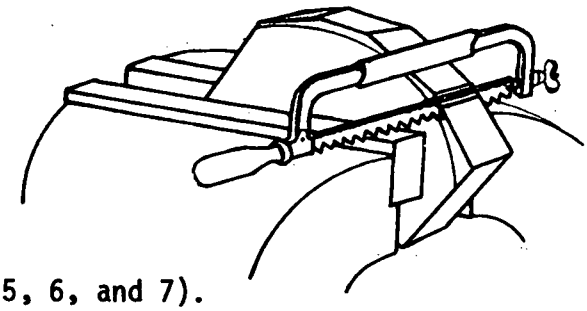

1st Step - *Mark the workpiece.*
2nd Step - *Clamp the workpiece.*
3rd Step - *Cut off excess material* (Figs. 5, 6, and 7).

Fig. 5 With hack-saw

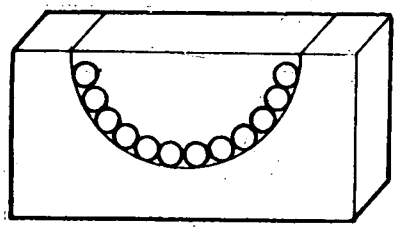

Fig. 6 With tangential drill and chisel.

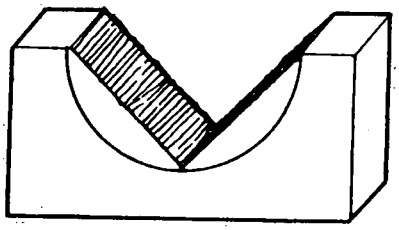

Fig. 7 With hack-saw

4th Step - *File*

a) Follow the markings as the workpiece is dressed.

b) Finish filing.

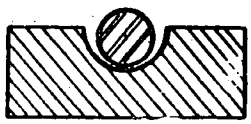

Fig. 8

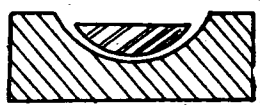

Fig. 9

OBSERVATIONS

1. For filing a concave surface, the curvature of the file should be less than that of the surface to be filed (Figs. 8 and 9).
2. The motion of the file should be similar to that shown in Figures 10, 11, 12, and 13.

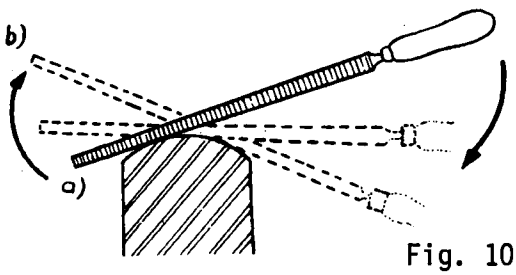

Fig. 10 Convex filing

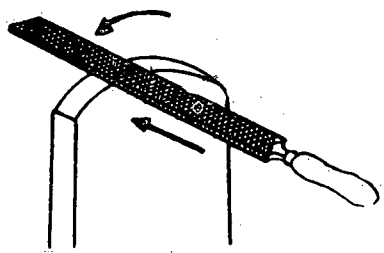

Fig. 11 Convex filing

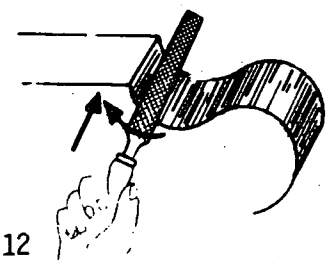

Fig. 12

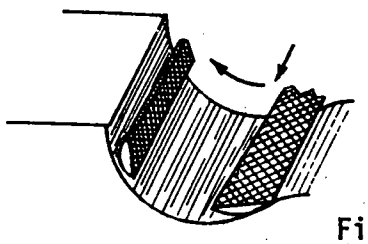

Fig. 13
Concave filing

5th Step - *Check the curvature against a template (Figs. 14 to 17).*

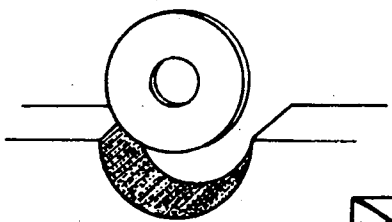

Fig. 14

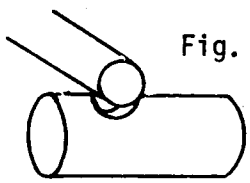

Fig. 15

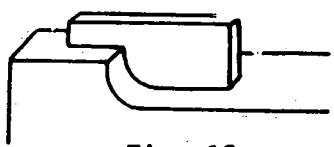

Fig. 16

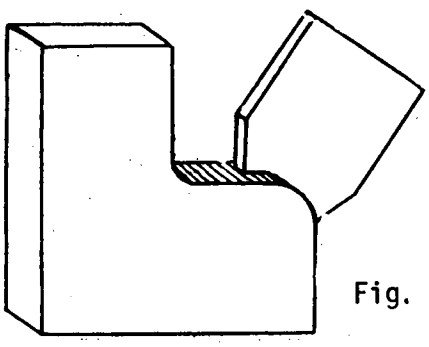

Fig. 17

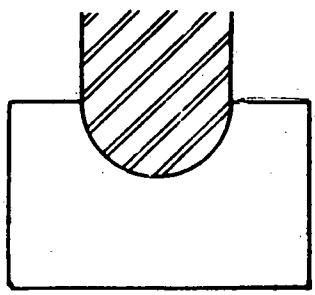

Fig. 18

OBSERVATION

If the workpiece is very thick, check the squareness of the surface.

CBC

OPERATION:
HORIZONTAL MACHINING OF FLAT AND PARALLEL SURFACES ON THE SHAPER

This is the mechanical operation which is carried out by means of the longitudinal movement of the tool combined with the transverse movement of the workpiece clamped to the table (Fig. 1). This operation is carried out to obtain reference surfaces and to make possible other works on workpieces such as, straight edges, bases, guides and machine beds.

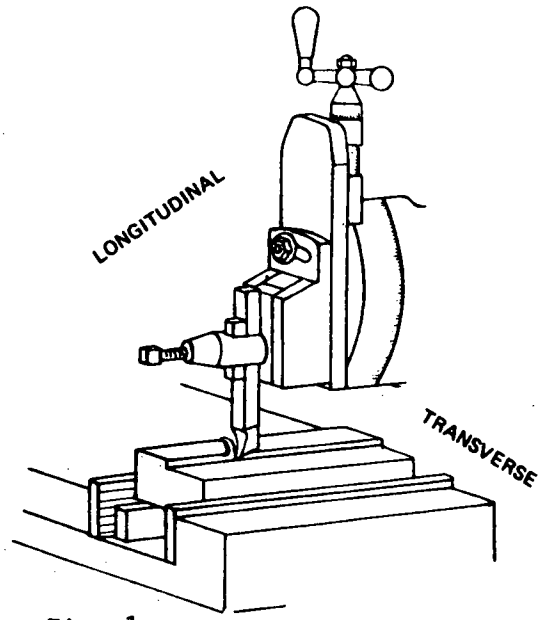

Fig. 1

PROCEDURE

I *MACHINING A HORIZONTAL FLAT SURFACE*

1st Step - *Clamp the workpiece* thus:

a) Clean the table and the machine vice.

b) Fix the vice on the machine-table in the position shown in Fig. 2.

c) Fix the workpiece in the vice and tighten it gently.

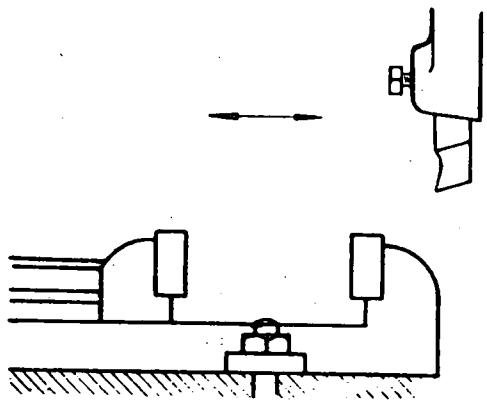

Fig. 2

OBSERVATIONS

1. The workpiece should be fixed in such a way that it can be machined lengthwise.
2. With thin workpieces, turn the vice as shown in Fig. 3.
3. Get rid of any burrs that may be on the surface of the jaws of the vice.
4. The workpiece should be clamped leaving an amount of material above the jaws equal to 3 or 4 mm more than the thickness to be machined.

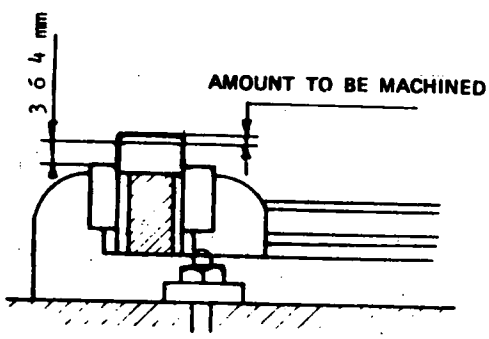

Fig. 3

d) Gently tap the workpiece to seat it and tighten the vice firmly.

OBSERVATION

For surfaces already machined, tap with a hammer of softer material than the workpiece.

2nd Step - *Fix the tool* thus:

a) Fix the toolholder on the tool-post and tighten (Fig. 4).

b) Fix the roughing tool (Fig. 5).

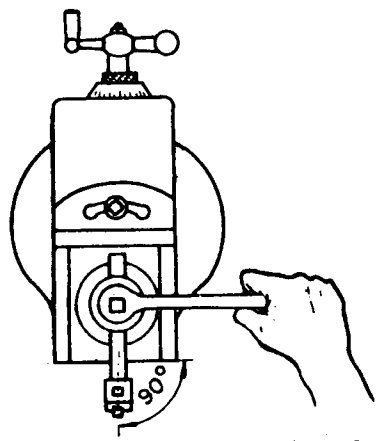

Fig. 4

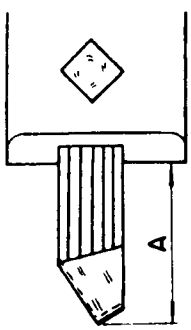

Fig. 5

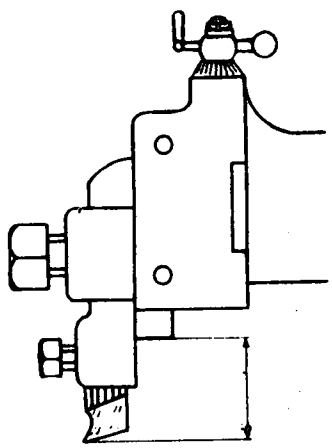

Fig. 6

OBSERVATION

The distance B should be as short as possible (Fig. 6).

3rd Step - *Prepare the machine* thus:

a) Bring the tip of the tool to about 5 mm above the surface to be planed (Fig. 7).

b) Adjust and centre the run of the tool (Fig. 8).

c) Oil the machine.

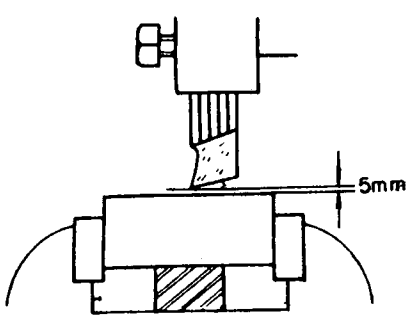

Fig. 7

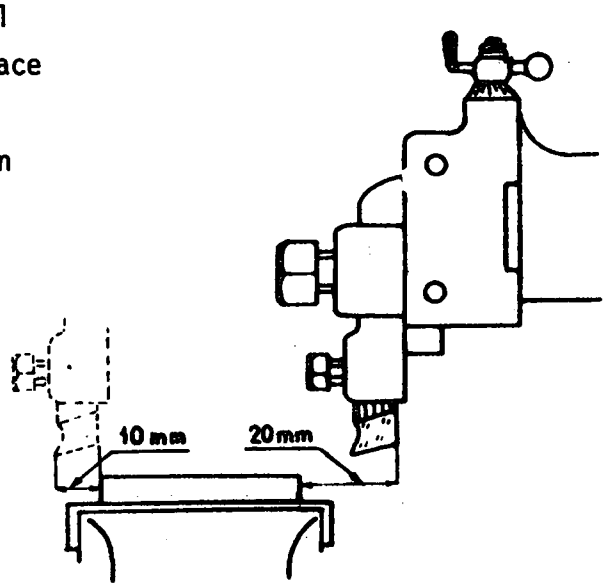

Fig. 8

4th Step - *Plane the surface* thus:

a) With the machine running, bring the tool down low enough to make contact.

b) Move the workpiece away from the tool (Fig. 9) and stop the machine.

c) Take reference, turn the feed screw dial and set it at zero (Fig. 10).

d) Set the cutting depth.

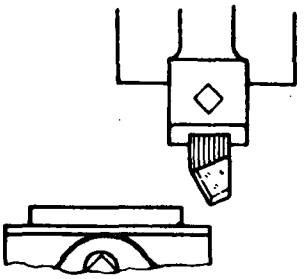

Fig. 9

OBSERVATION
If the material is soft, start roughing with deep cuts.

e) Start the machine and move the workpiece laterally until it makes contact with the tool.

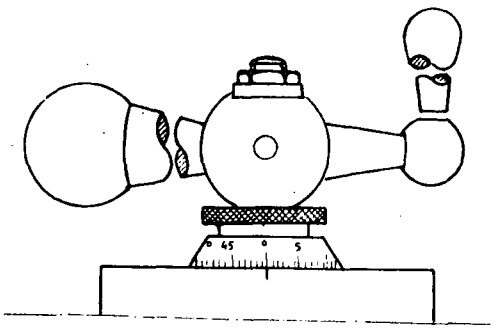

Fig. 10

f) Engage the automatic feed (Fig. 11) and machine the surface.

OBSERVATION
Leave between 0.2 mm and 0.3 mm for finishing the surface.

g) Stop the machine once the surface is obtained.

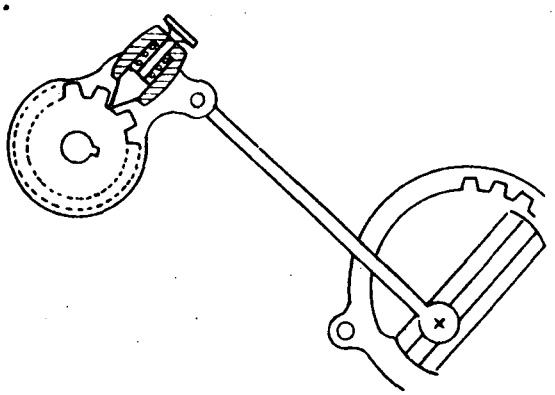

Fig. 11

OBSERVATION
When a very smooth finish is required, do the final run with a finishing tool.

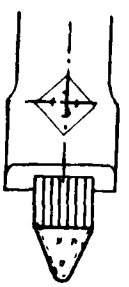

Fig. 12

II *PLANING A FLAT, PARALLEL SURFACE*

1st Step - *Clamp the workpiece* thus: *(Fig. 13)*.
(See the observations in Part I - 1st Step).

a) Set the workpiece on two parallel shoes.
b) Use a packing piece on each jaw of the vice so that the workpiece is held firmly on the parallels.

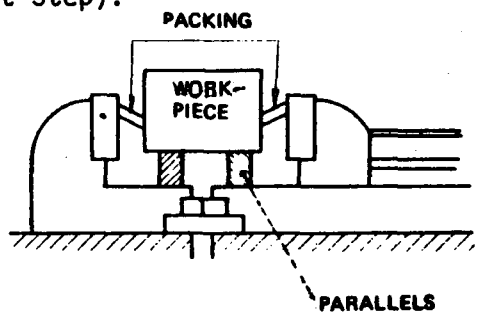

Fig. 13

2nd Step - *Machine the surface*.
(See Part I - 4th Step)

3rd Step - *Measure and check* for parallelism, using a vernier caliper (Fig. 14).

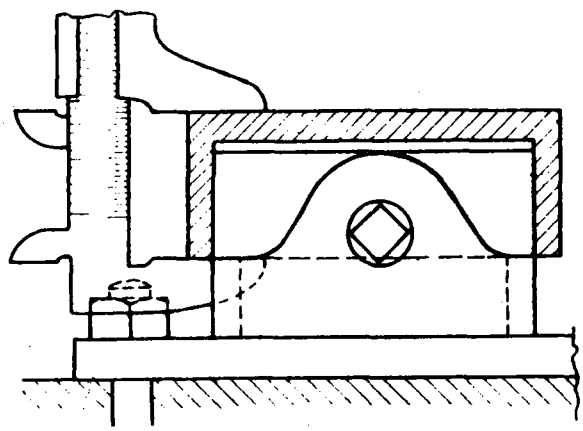

Fig. 14

OBSERVATIONS

1. Measurements are taken while the workpiece is clamped in the vice.
2. Check for parallelism by measuring at several points. If it is necessary, loosen the workpiece, remove any burrs, and clean it.

This operation is to machine a surface vertically by a combination of a lengthwise and vertically descending motion of the tool (Feeding - Fig. 1).
This method is used to make reference surfaces and perpendicular surfaces on workpieces such as prisms, parallels, guides and machine beds, etc.

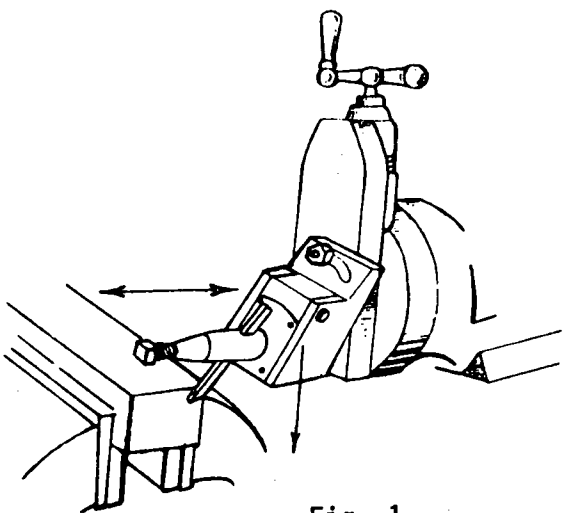

Fig. 1

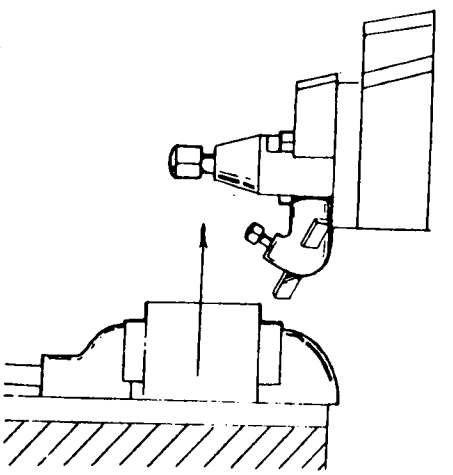

Fig. 2

PROCEDURE

1st Step - *Clamp the workpiece.*

OBSERVATION

Where it is not possible to hold the workpiece with the vice, use squared sections or clamp directly to the table (Fig. 3).

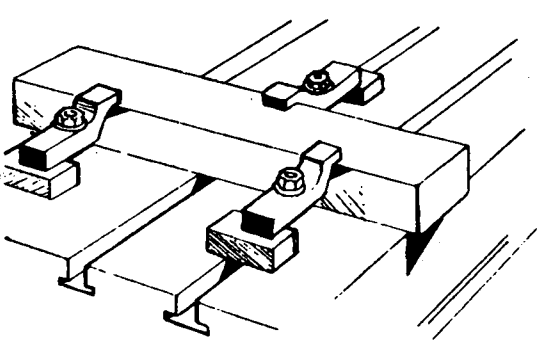

Fig. 3

2nd Step - *Fit the tool*, thus:

a) Tilt the clapper box (Fig. 4).

OBSERVATION

Tilting the clapper box allows the tool to move away from the workpiece on the return stroke, and thus avoids scratching the milled surface.

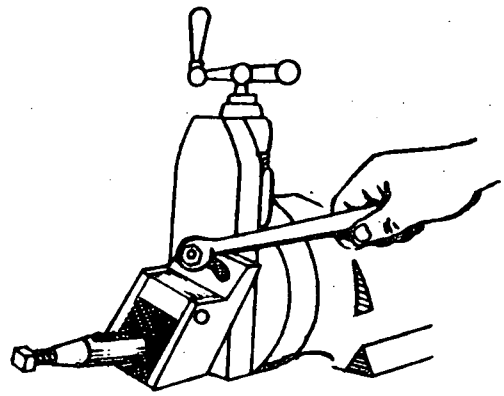

Fig. 4

b) Fit the tool-holder and the tool, and tighten them.

3rd Step - *Prepare the machine*, thus:

a) Oil it.

b) Determine the number of strokes per minute.

c) Adjust the run of the tool-head.

4th Step - *Shape the surface*, thus:

a) Start the machine.

b) Move the tool towards the workpiece.

c) Adjust the table to give the proper cutting depth.

CAUTION

SET THE CUTTING DEPTH WHILE THE MACHINE IS STOPPED.

d) Machine using the manual feed (Fig. 5).

OBSERVATIONS

1. If the run of the tool slide is not sufficient for very large vertical surfaces, raise the table in order to complete machining.
2. Use a suitable coolant, if necessary.

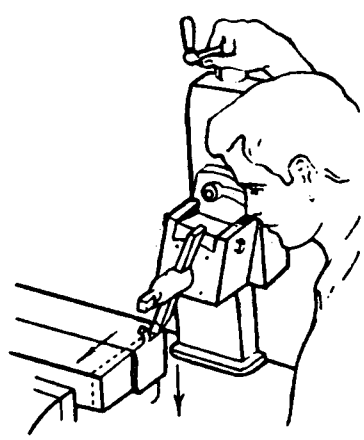

Fig. 5

OPERATION:
CUTTING ANGULAR FLAT SURFACES ON THE SHAPER

This is to obtain angular flat surfaces by means of two movements of a tool: a reciprocating movement and the other of a manual feed. For the manual feed the clapper box has to be tilted with relation to the reference surface (Figs. 1 and 2). Or, the machining can be kept horizontal while the workpiece is clamped at the required angle. This operation serves to make guides for machines, straight edges, and V-blocks for tracing.

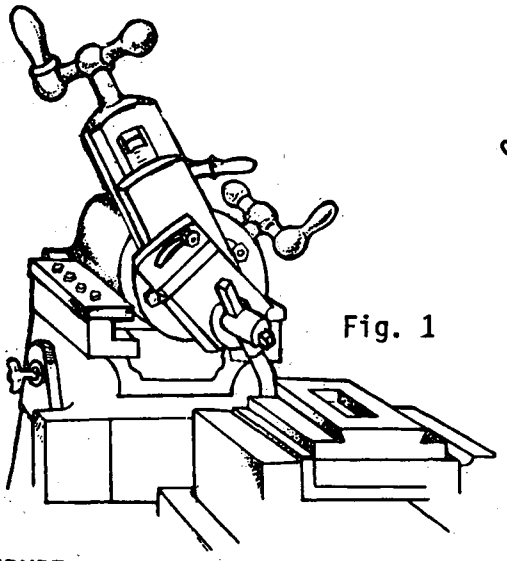

Fig. 1

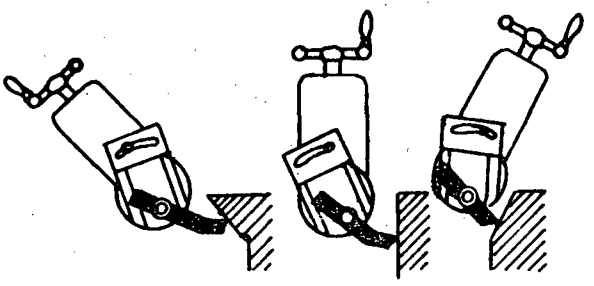

Fig. 2

PROCEDURE

1st Step - *Mark the workpiece.*

2nd Step - *Clamp the workpiece.*

OBSERVATION

The workpiece may be clamped in the vice or to the table (Figs. 3 and 4).

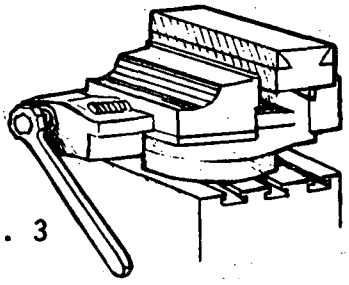

Fig. 3

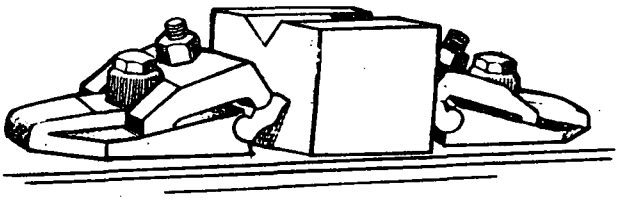

Fig. 4

3rd Step - *Fix the tool.*

OBSERVATION

See that the tool is sharp, taking into account the angle to be cut.

4th Step - *Prepare the machine* thus:

a) Oil the machine.
b) Adjust and position the length of stroke.
c) Tilt the tool head (Fig. 5).

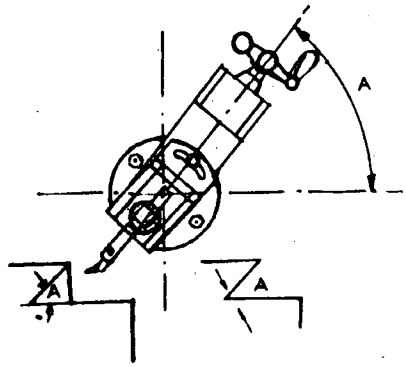

Fig. 5

OBSERVATION

1. Tilt the tool head to make acute or obtuse angles.
2. For acute angles (Fig. 6) the angle is equal to 90° A.

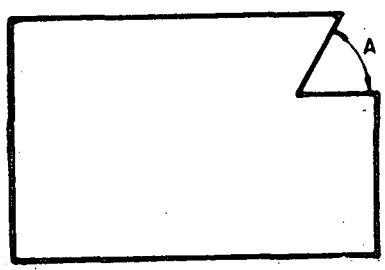

Fig. 6

3. When the angle is obtuse and one side is parallel to the horizontal plane (Fig. 7), the angle of the tool head will be A - 90°.

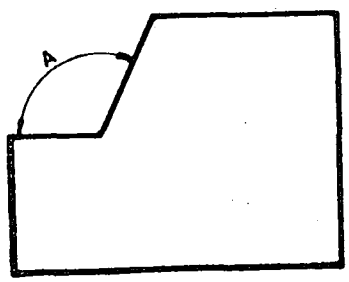

Fig. 7

4. When the angle is obtuse and one side is perpendicular to the horizontal plane (Fig. 8), the angle is equal to 180° - A.

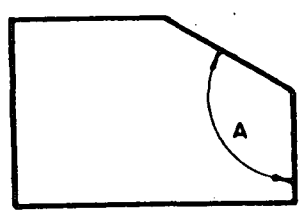

Fig. 8

d) Tilt the clapper box (Fig. 9).

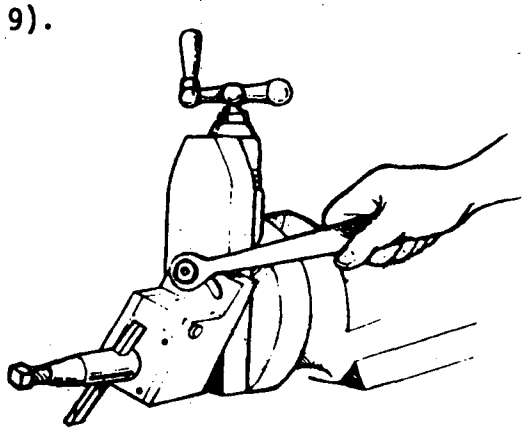

Fig. 9

OBSERVATION

The clapper box must be tilted in a direction opposite to the tilt of the tool head so that the tool will not damage the machined surface.

e) Set the number of strokes per minute.

f) Adjust the cutting-depth.

5th Step - *Machine*, following the markings thus:

a) Check and, if necessary, adjust the tilt of the tool head.

OBSERVATION

To make an angle machining horizontally, put the workpiece in the vice on angle strips (Fig. 10).

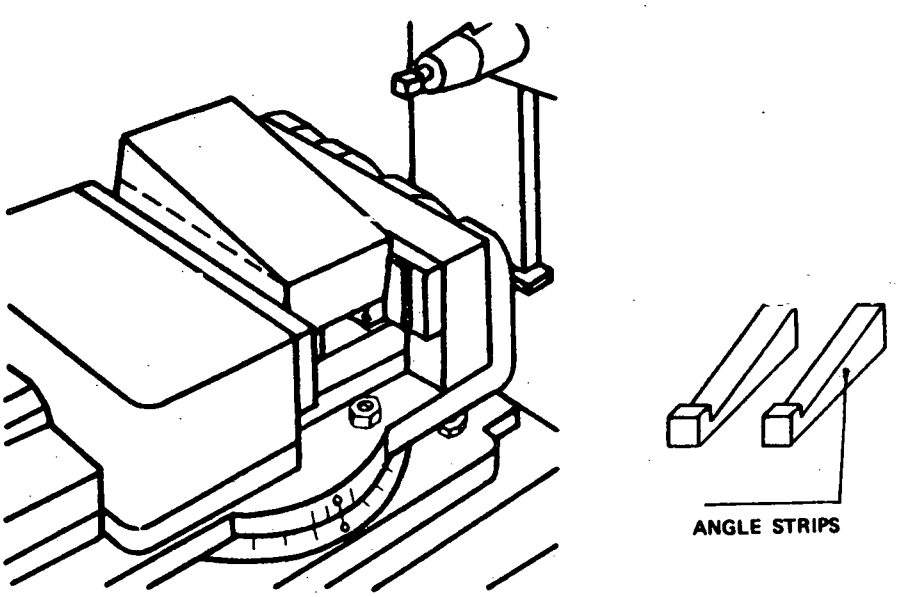

Fig. 10

CBC

OPERATION:

SPRING WINDING
(IN THE VICE)

This is the manual operation by which spiral springs are made of steel wires of up to 1.5 mm in diameter. This is done by rolling the wire on a rod of a set diameter that is turned between two pieces of wood held in the vice (Fig. 1). These springs are used in machine assemblies such as levers, pedals, and the like.

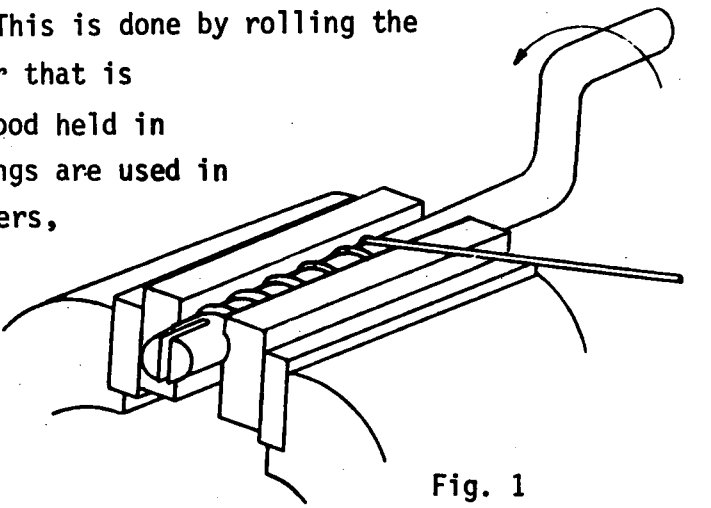

Fig. 1

PROCEDURE

1st Step - *Prepare two wooden blocks* (Fig. 2).

OBSERVATION

The wood should be hard enough to withstand the pressure of the wire.

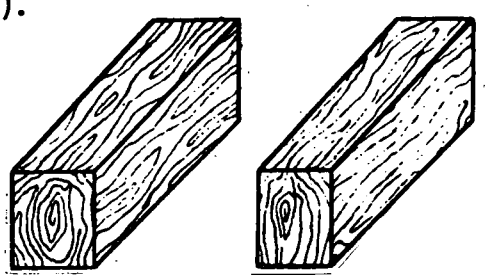

Fig. 2

2nd Step - *Choose the crank.*

OBSERVATIONS

1. The diameter of the rod depends on the diameter and the hardness of the wire.
2. It is best to run a few tests to determine the exact diameter of the rod. Generally, it should be 7/8 of the inner diameter of the spring.

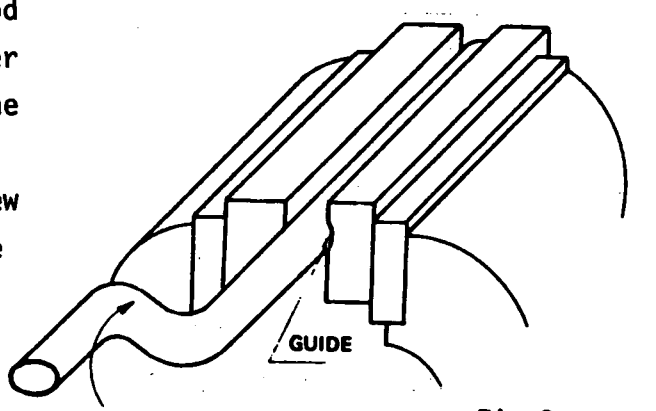

Fig.3

3rd Step - *Clamp the blocks and the crank in the vice (Fig. 3).*

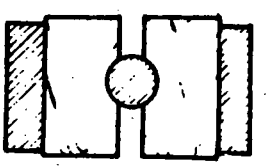

Fig. 4

4th Step - *Turn the crank* so as to make a guide in the wood (Fig. 4).

5th Step - *Put the end* of the wire into the hole or groove of the rod (Fig. 5).

OBSERVATIONS

1. The wire should go in at the top of the rod.
2. To make springs with spirals towards the left, position the rod as shown in Fig. 6.
3. To make springs with spirals towards the right, position the rod as shown in Fig. 1.

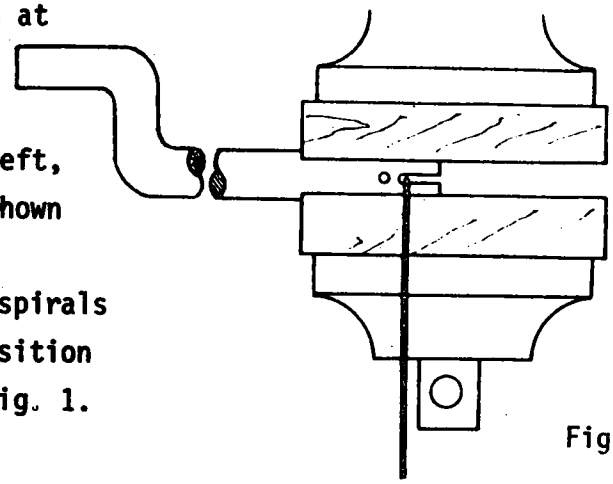

Fig. 5

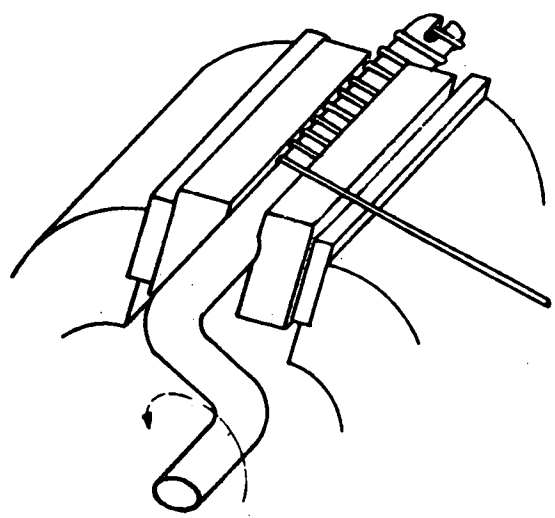

Fig. 6 Spirals to the left

6th Step - *Wind the spring* by turning the crank in the opposite direction to that of the wire.

OBSERVATIONS

1. The distance between turns is increased by pulling the wire in the direction of the spirals.
2. In making tension springs, the wire should be held at right angles to the jaws of the vice.

7th Step - *Remove the spring* thus:

a) Reduce the tension of the spring by gently twisting the crank in the other direction.

b) Open the vice.

CAUTION

THE VICE SHOULD BE OPENED WITH CARE, AS TENSION COULD CAUSE THE SPRING TO FLY OUT.

CBC	OPERATION: SHARPENING TWIST DRILLS	REF. OS.20/MF	1/2
		Caribbean	

This operation consists of preparing the cutting edges of drills for better penetration and cutting (Fig. 1).
It is carried out by means of grinding wheels which revolve at high speeds mounted on a shaft driven by an electric motor. There are two ways of doing this: by hand or with special devices.

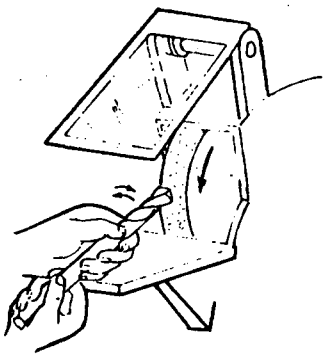

Fig. 1

PROCEDURE

1st Step - *Start the grinder.*

CAUTION

ALL WORK DONE WITH GRINDING WHEELS DEMANDS THAT THE EYES BE PROTECTED.

2nd Step - *Hold the drill* and move it towards the grinding wheel (Fig. 1).

OBSERVATION

The cutting edge of the drill must be in a horizontal position.

CAUTION

THE DRILL MUST BE HELD FIRMLY AND BROUGHT TOWARDS THE GRINDING WHEEL CAREFULLY.

3rd Step - *Sharpen one of the edges* thus:

a) Rest the drill on the grinding wheel at a suitable angle (Fig. 2).

Angle A - Position for obtaining the drill point angle.
Angle B - Position for obtaining the clearance angle.

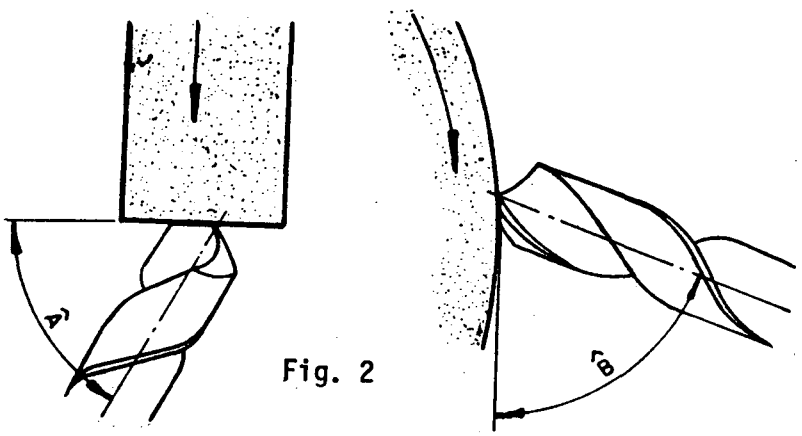

Fig. 2

b) Turn the drill around until its contact with the grinding wheel covers all the surface from point A to point B (Fig. 3)

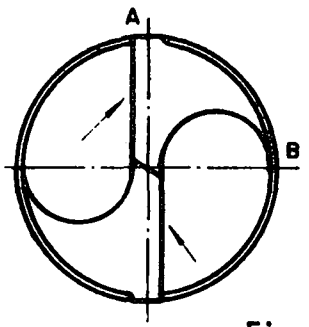

Fig. 3

OBSERVATIONS

1. A table will give the angles for the drill.
2. Cool the drill in water to keep it from losing its temper.

4th Step - *Check the angle of the drill* with a drill point gauge or a protractor (Fig. 5). If necessary, repeat the third step until the result is perfect.

Fig. 4

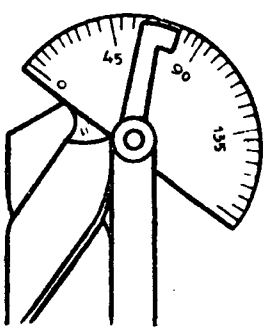

Fig. 5

5th Step - *Sharpen the other cutting edge* and check it, following the third and fourth steps. Also, take care that both cutting edges are of the same length.

6th Step - *Check the size of the cutting edges.*

OBSERVATION

Use the scale on the drill point gauge (Fig. 4).

CBC

OPERATION:
SAWING WITH THE BAND SAW

This is the operation by which material is cut with a saw-blade (saw-band) with a continuous and uniform movement (Fig. 1). Cuts may be straight, curved, or a combination of both; they may be open or closed. Because it is easy and done fast, this method is used when preparing workpieces to be machined.

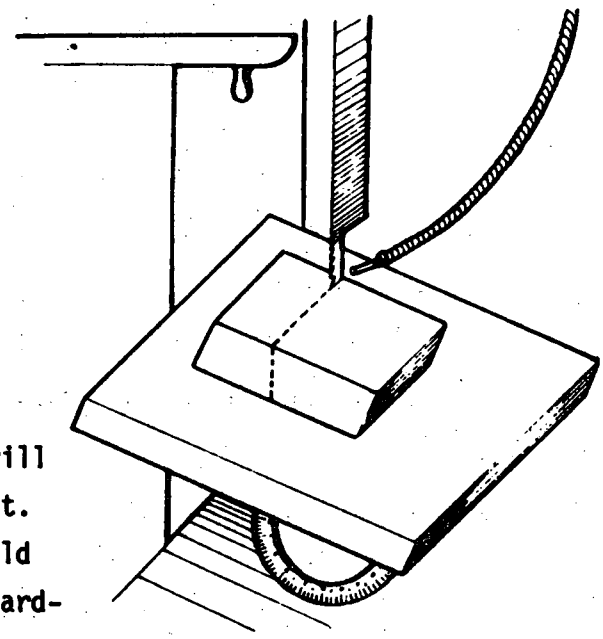

Fig. 1

PROCEDURE

1st Step - *Mark the material.*

2nd Step - *Choose saw-blade* and guides.

OBSERVATIONS

1) The width of the blade will vary according to the cut.
2) The number of teeth should suit the thickness and hardness of the material.
3) The length is usually specified on the machine, and can also be worked out using the diameters of the drive wheels and the distance between their centres.
4) Choose the guides according to the width of the blade.

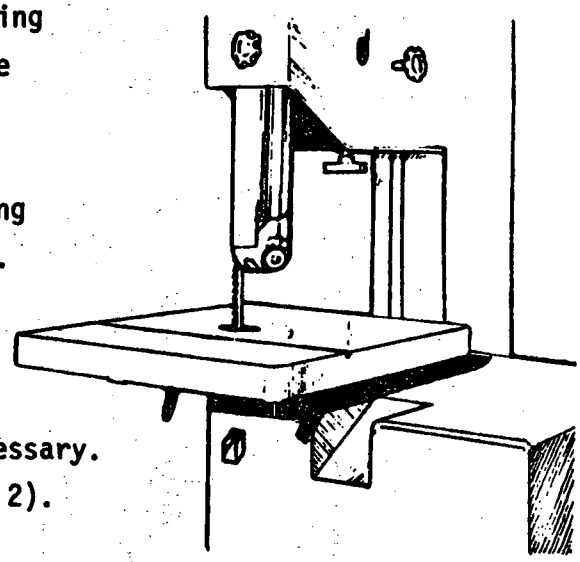

Fig. 2

3rd Step - *Mount the saw* thus:

a) Change the guides, if necessary.
b) Release the tension (Fig. 2).
c) Fit the saw.

OBSERVATIONS

1) The teeth of the saw should face outwards and follow the direction of the movement of the saw.
2) With a closed cut (Fig. 3), the saw is cut, pushed through a previously made hole, and welded while on the machine.

d) Adjust the saw by turning the turnbuckle in the opposite direction.

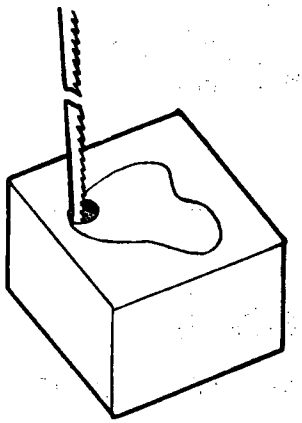

Fig. 3

OBSERVATION

The tension of the blade should not be too great.

e) Close the guards around the blade.

4th Step - *Prepare the machine* thus:

a) Adjust the speed.
b) If necessary, adjust the position of the table to suit the angle of the cut (Fig. 1).

5th Step - *Saw* thus:

a) Start the machine.
b) Push the material towards the blade using gentle pressure, and begin cutting (Fig. 4).
c) Finish the cut, following the markings.

CAUTION

AT THE END OF THE CUT, USE A PIECE OF WOOD TO PUSH THE MATERIAL AWAY, IN ORDER TO AVOID ACCIDENTS.

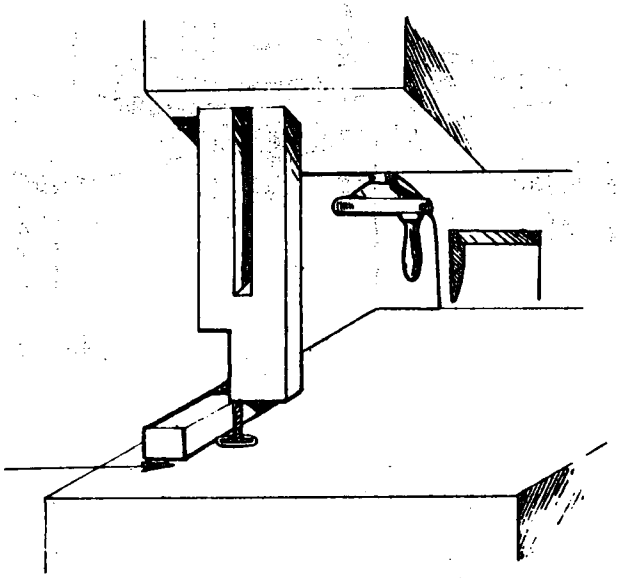

Fig. 4

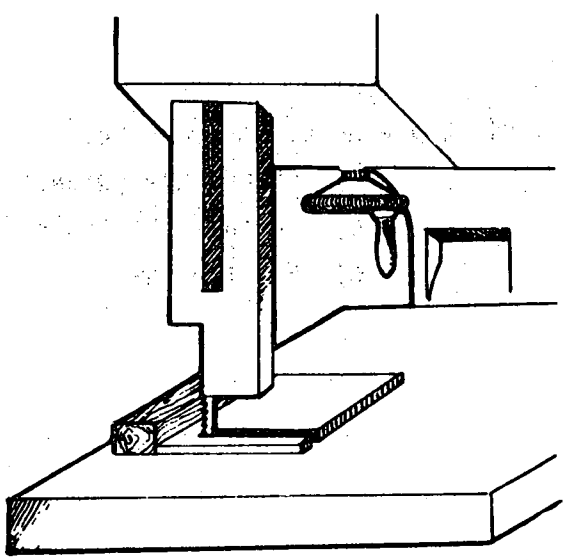

Fig. 5

Threads are cut on the outside of cylindrical workpieces by using a stock and die in a circular, back-and-forth movement (Fig. 1).

This process is used for making screws and similar parts.

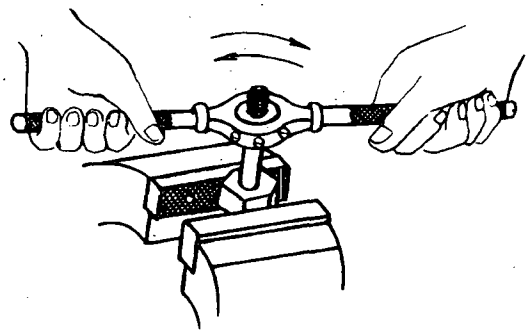

Fig. 1

PROCEDURE

1st Step - *Prepare the material* thus:

a) Chamfer the material to start the operation easier (Fig. 2).

OBSERVATION
The chamfer is usually 60° and done on the lathe. The grinding wheel may also be used.

b) On the material, mark the length of the thread.

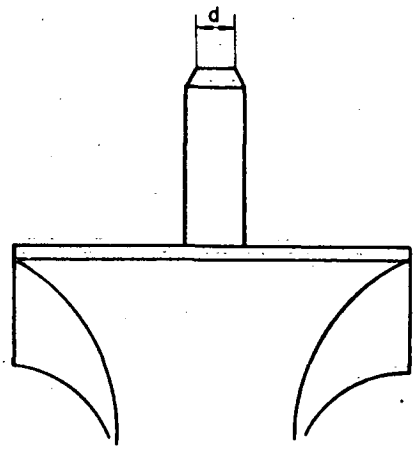

Fig. 2

2nd Step - *Select the die* thus:

a) Measure the diameter of the workpiece.

b) Find out the pitch or the number of threads.

OBSERVATION
When choosing the die, bear in mind the diameter of the workpiece, and the pitch or number of threads.

3rd Step - *Choose a die-stock.*

OBSERVATION
The die-stock must be chosen to fit the outer diameter of the die.

4th Step - *Fit the die (Fig. 3).*

OBSERVATIONS

1. The larger, conical part of the die goes on the outside.
2. Make the opening of the die coincide with the regulating screw (Fig. 3).

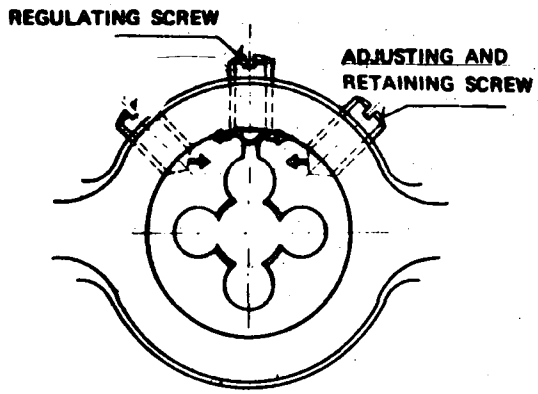

Fig. 3

3. The notches or perforations on the outer edge of the die should match the retaining screws on the stock (Fig. 3).

5th Step - *Clamp the workpiece.*

OBSERVATION

If the workpiece is cylindrical, use a V-shaped jaw to restrict it from turning and ensure vertical position (Fig. 4).

6th Step - *Thread* thus:

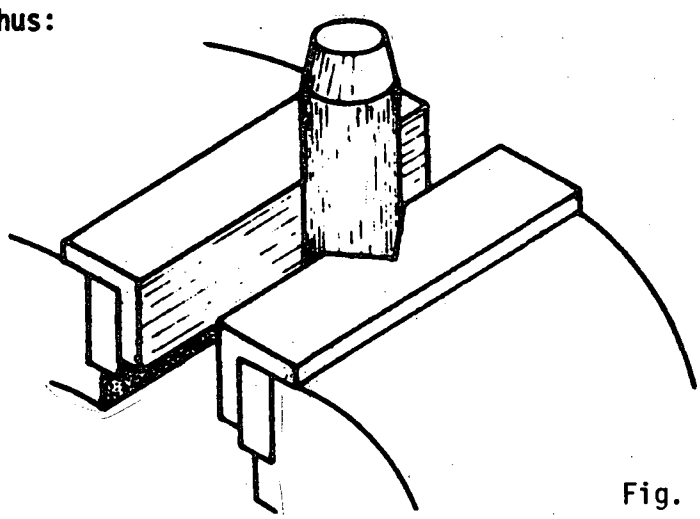

Fig. 4

a) Place the larger conical part of the die on the chamfer.

b) Begin threading by turning the die in a continuous clockwise motion. Keep pressing until two or three threads have been cut.

c) Use cutting oil.

d) Finish threading with back-and-forth movements, giving ½ of a turn clockwise, and ¼ of a turn in a counter-clockwise direction.

7th Step - *Check the threads* thus:

a) Remove the die turning it counter-clockwise.

b) Clean the thread with a brush.

OBSERVATION

The thread is generally checked with a nut (Fig. 5) or with a master gauge (Fig. 6).

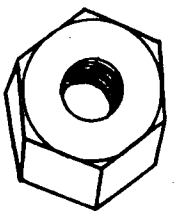

Fig. 5

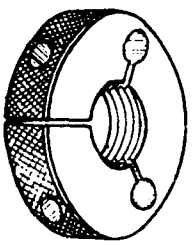

Fig. 6

8th Step - *Adjust the die and re-thread* if necessary.

CBC

OPERATION:
COUNTERBORING

This operation consists of widening the diameter of a hole to a specified depth (Fig. 1).

The purpose is to embed the heads of screws, rivets, nuts and various parts. By embedding them, they lie flat, the work looks better, and any danger from protruding parts is avoided. Counterboring is sometimes done to embed bushings. In this case a plate countersinker is generally required.

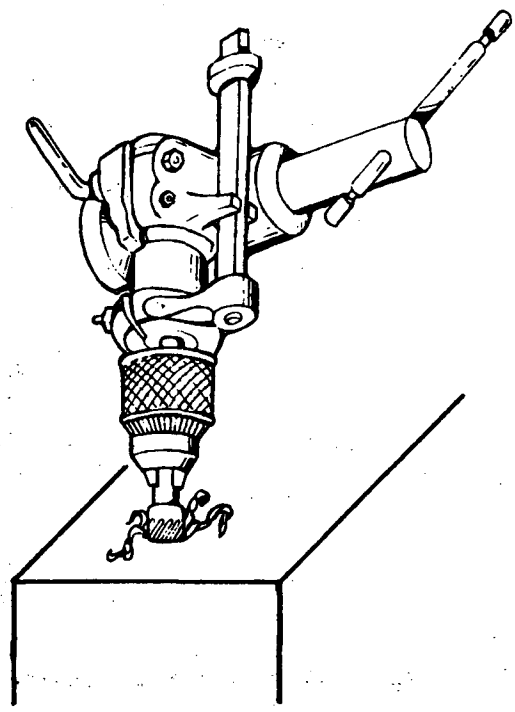

Fig. 1

PROCEDURE

1st Step - *Clamp the workpiece (Fig. 2).*

2nd Step - *Prepare the machine* thus:

a) Choose the proper tool and fit it in the chuck (Fig. 3).

OBSERVATION

If the drill has a taper shank, fit it directly into the spindle of the machine (Fig. 4), and use sleeves if necessary.

b) Adjust the rotation speed.

OBSERVATION

Check the table.

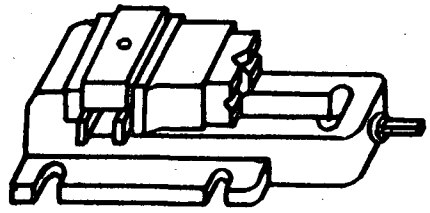

Fig. 2

3rd Step - *Counterbore*, thus:

a) Set the tool guide in the hole of the workpiece so that the cutting edges touch it, and set the cutting depth.

b) Start the machine.

c) Apply a light pressure on the lever so that the tool will penetrate easily.

OBSERVATION

The cutting fluid must be appropriate for the material being cut.

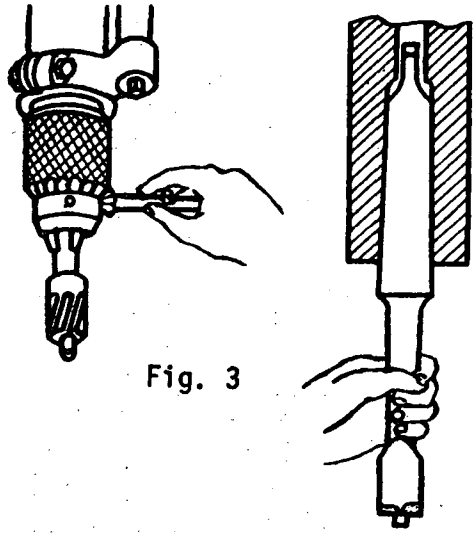

Fig. 3

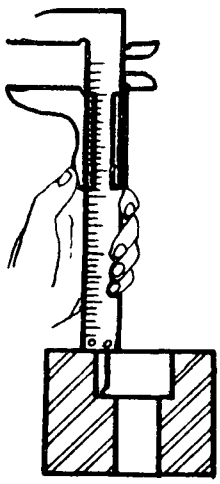

Fig. 5

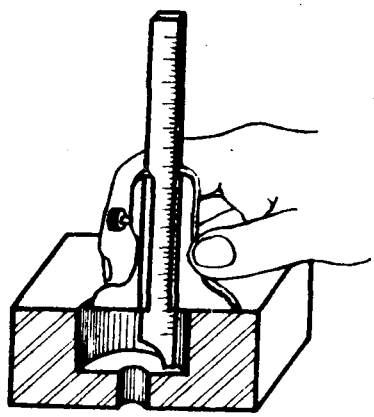

Fig. 6

4th Step - *Check the counterbore*
with a vernier calliper (Fig. 5) or a depth gauge (Fig. 6).

CBC

OPERATION:

STRAIGHT REAMING WITH A FIXED HAND REAMER

REF. OS.24/MF | 1/2

Caribbean

A boring, scraping tool called a reamer is used to finish the surfaces of holes (Fig. 1).

It is used for finishing holes according to a standard mostly in mass production and when shafts or bushings are to be fitted.

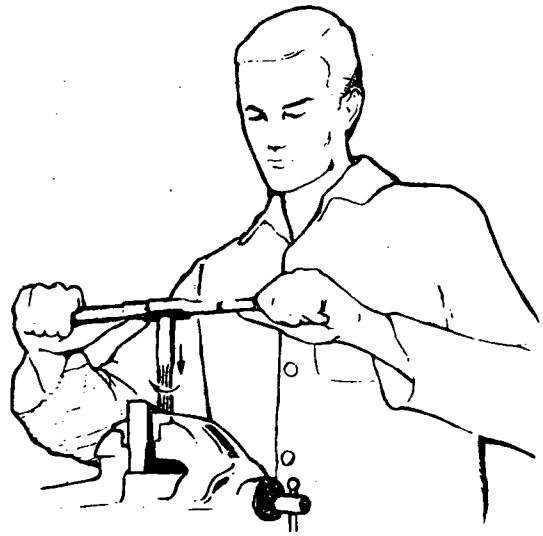

Fig. 1

PROCEDURE

1st Step - *Clamp the workpiece*, if necessary.

2nd Step - *Measure the diameter of the hole*, making sure that it is about 0.15mm less than the required diameter.

3rd Step - *Select a reamer* of the required diameter.

OBSERVATION

The diameter of a reamer is shown on its shank.

4th Step - *Select a tap wrench.*

OBSERVATION

The length and weight of the tap wrench must be proportional to the diameter of the reamer.

5th Step - *Start reaming* thus:

a) Fit the reamer on the tap wrench.

b) Oil the reamer with a thin brush.

OBSERVATION

Bronze and cast-iron are reamed dry. With other metals, consult the chart of cutting-fluids.

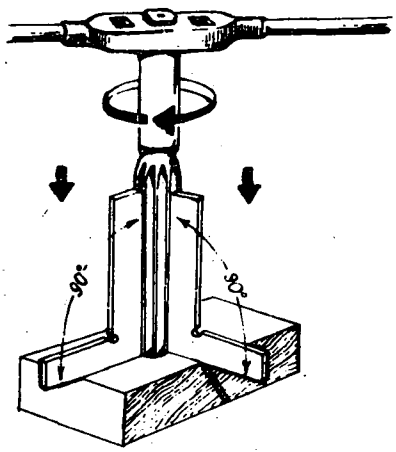

Fig. 2

c) Push the reamer in, keeping it perpendicular to the axis of the hole (Fig. 2).

d) Begin reaming by pressing gently, and turning slowly and steadily to the right (clockwise) (Fig. 2).

OBSERVATION
Always turn to the right, otherwise the cutting edges may be damaged by the metal filings between them.

e) Finish passing the reamer through.

6th Step - *Do the final check* thus:

a) Remove the reamer by turning it constantly to the right while pulling it out of the hole.

OBSERVATION
On removing the reamer, always clean the cutting edges with a brush.

b) Clean the hole.

c) Measure it with an inside micrometer (Fig. 3) or a fixed "plug" caliper (Fig. 4).

OBSERVATION
Reaming can be done in the drilling machine. In this case the centering done for drilling can be used for reaming. Consult the chart for the correct speed.

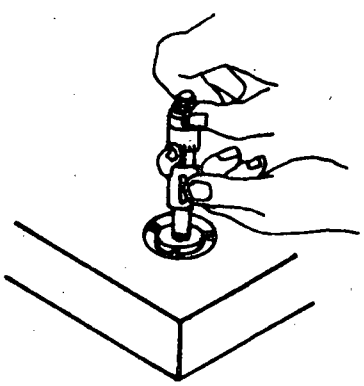

Fig. 3

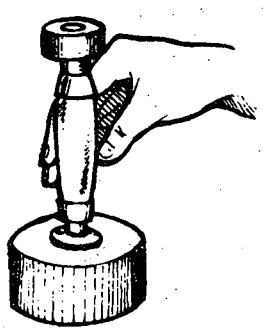

Fig. 4

CBC

OPERATION:
MACHINING STRAIGHT GROOVES

This is to cut grooves in a workpiece by the vertical feed and the reciprocating lengthwise action of a tool (Fig. 1), with the purpose of shaping the workpiece with the shaper.

This operation is usually carried out in the construction of machine devices used for holding parts such as guides, keyways and tool-holding devices.

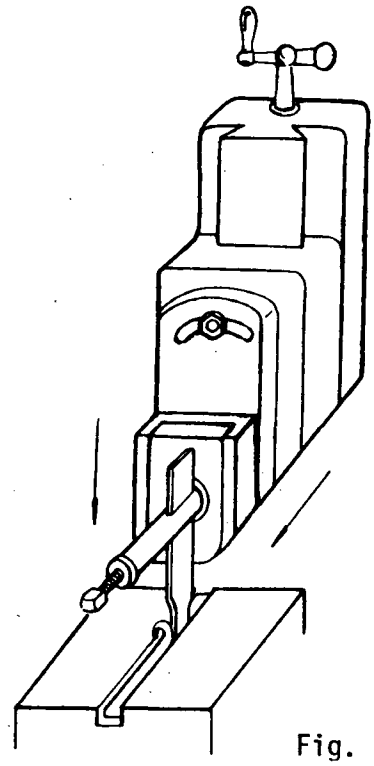

Fig. 1

PROCEDURE

1st Step - *Fix the vice in the desired position.*

2nd Step - *Mark the workpiece.*

3rd Step - *Clamp the workpiece.*

4th Step - *Choose the tool* and secure it in the tool post, or directly into the tool-holder, as the case demands.

OBSERVATION

For very wide and shallow grooves, use the tool shown in Figure 2.
For deep, narrow grooves, use the tool shown in Figure 3.

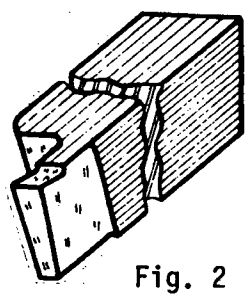

Fig. 2
GROOVING TOOL

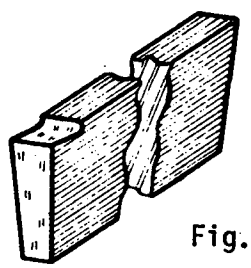

Fig. 3
GROOVING TOOL (PARTING)

5th Step

a) Set the stroke of the ram.
b) Set the number of strokes per minute.

c) Check the alignment of the marks with a scriber (Fig. 4) or with the correct tool.

OBSERVATIONS

If it is necessary to make corrections, loosen the screws of the swivel base, align it, and tighten it again.

If the workpiece is held in a vice and the groove to be cut is parallel to the jaws of the vice, a dial indicator may be used to align it (Fig. 5).

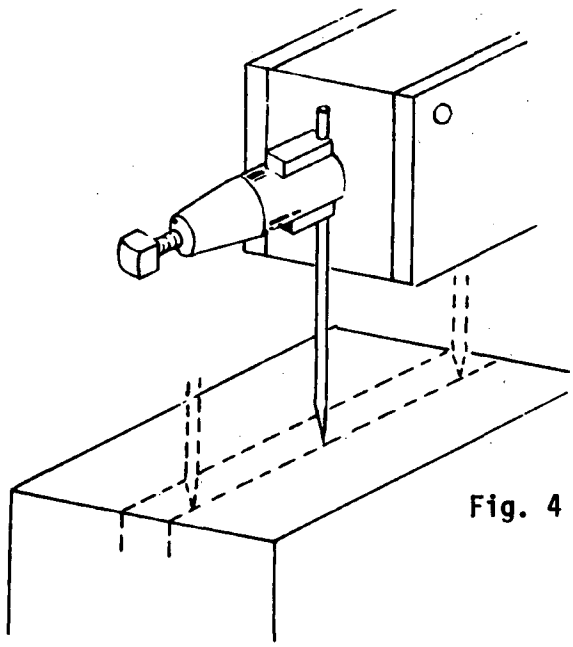

Fig. 4

d) Secure the tool.

e) Oil the slide-ways.

6th Step - *Cut* thus:

a) Slowly bring the tool towards the surface of the workpiece until it touches it.

b) Line up the "zero" on the graduated base with the reference mark.

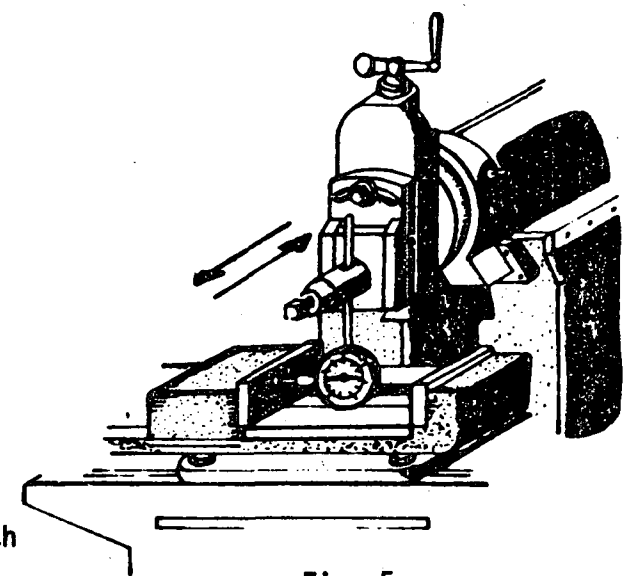

Fig. 5

c) Move the ram of the machine until the tool is away from the workpiece.

d) Set the cutting depth at about 0.1 mm.

e) Start the machine.

f) Begin cutting the groove.

CAUTION

***BE CAREFUL WITH THE** CHIPS WHICH ARE HOT AND SHARP.*

OBSERVATIONS

1. The cutting depth is given on the return run.
2. For very wide grooves that are wider than the cutting tool, shallow cuts are made in sections (Fig. 6) and then machined, also in sections (Fig. 7).
   This is done because the tool will vibrate too much and may break due to excessive stress.
   After this, sharpen the tool to do the finishing (Fig. 8).

Fig. 6

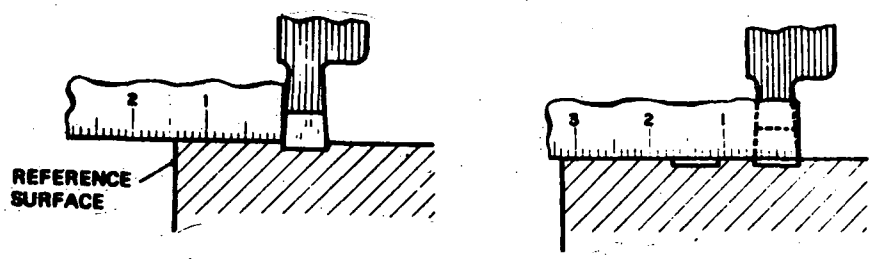

1st cut 2nd cut

Fig. 7

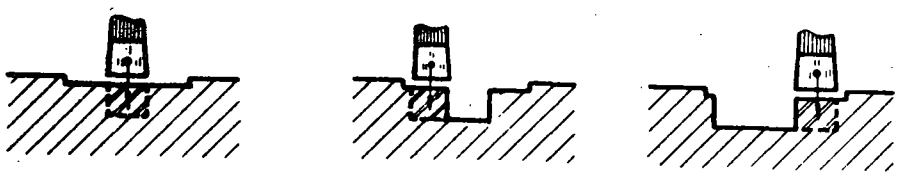

1st cut 2nd cut 3rd cut

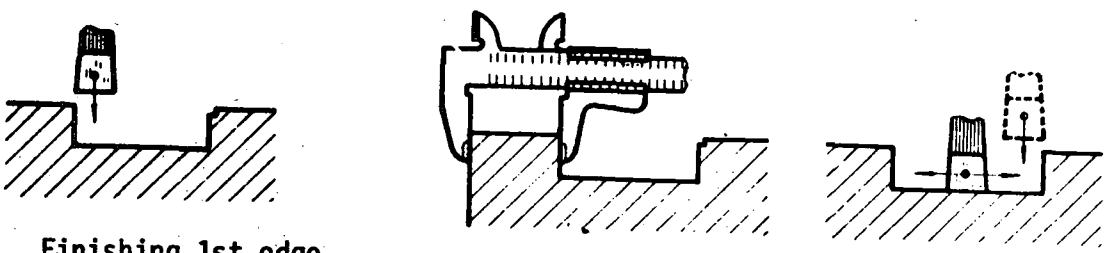

Finishing 1st edge Checking Finishing 2nd edge and cutting

Fig. 8

3. If the grooves are not straight-through, a hole is made so that the tool will come out more easily (Fig. 9).

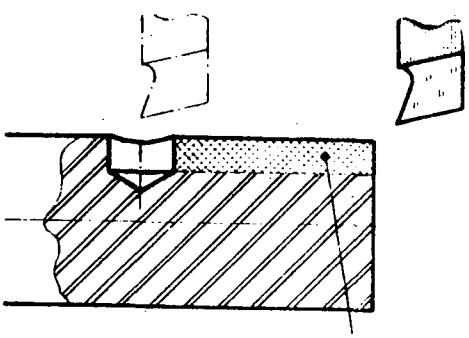

Fig. 9

7th Step - *Check.*

OBSERVATION

Whatever the type of groove, the depth and width must always be checked, preferably with a vernier caliper (Fig. 10).

Fig. 10

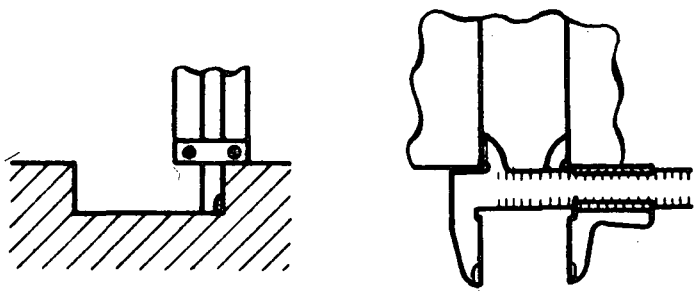

CHECKING DEPTH CHECKING WIDTH

CBC

OPERATION:

CUTTING GROOVES WITH THE SHAPER

In this operation a cutting tool of a particular shape is used to cut regular equally-spaced grooves in a flat surface. (Fig. 1).

Grooves may be parallel or crossed. They are used to retain workpieces and prevent them from slipping under the force of traction, compression or impact.

They are used on the jaws of vices, wire-drawing grids and lathe dogs.

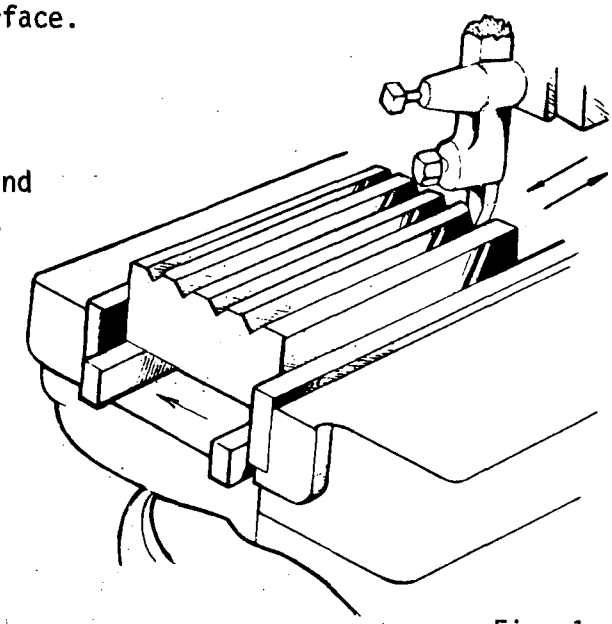

Fig. 1

PROCEDURE

1st Step - *Clamp the workpiece* thus:

a) Position the vice.

OBSERVATION

The position of the vice depends on the direction in which the grooves run (Figs. 2 and 3).

b) Fit the workpiece in the vice and tighten it.

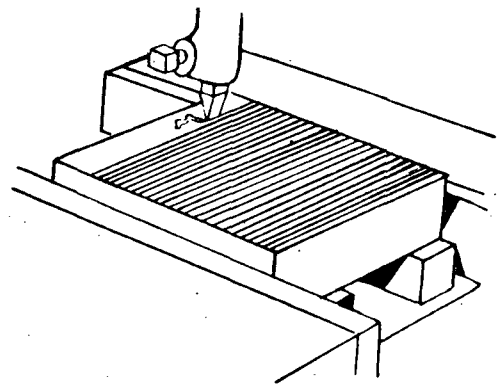

Fig. 2

2nd Step - *Fit the tool.*

OBSERVATION

Choose a tool to suit the angle of the groove (Fig. 4).

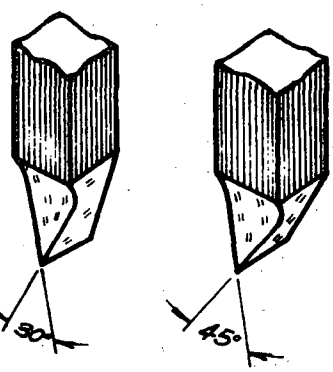

Fig. 4

3rd Step - *Prepare the machine* thus:

a) Adjust the stroke of the ram.

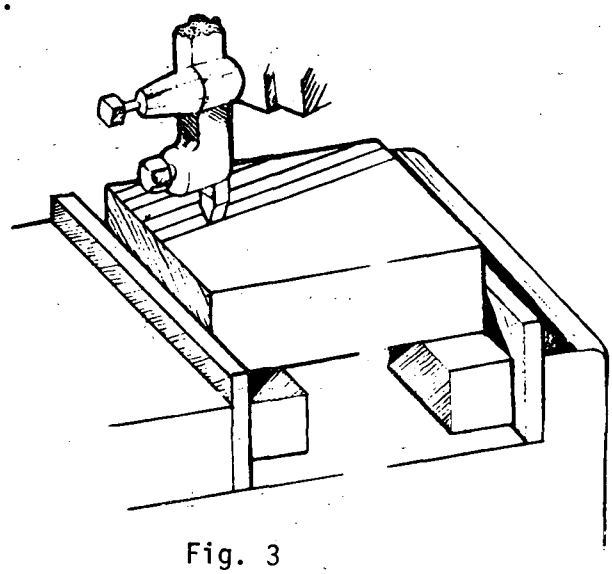

Fig. 3

OBSERVATION

The tool must be higher than the workpiece.

b) Calculate the number of divisions through which the table will have to be moved in order to get the distance between grooves.

c) Set the number of strokes per minute.

d) Start the machine.

e) Move the tool slowly towards the workpiece so as to mark it lightly.

f) Stop the machine and move the tool away from the piece.

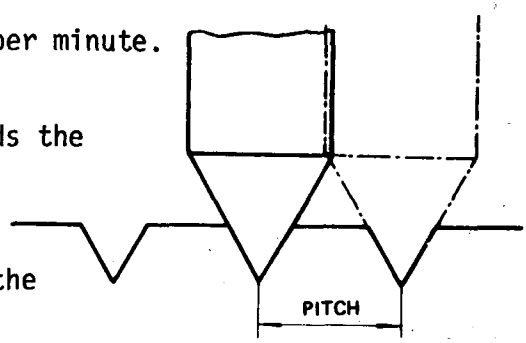

Fig. 5

g) Line up the zero on the feed screw dial of the clapper box with the reference mark.

h) Move the table for a distance equal to 10 grooves (Fig. 6).

i) Start the machine and make another marking.

j) Stop the machine and check if the space between the marks corresponds to 10 grooves (Fig. 6).

OBSERVATION

If it is not exact, calculate the number of divisions again, and repeat the preceding sub-step starting from (e).

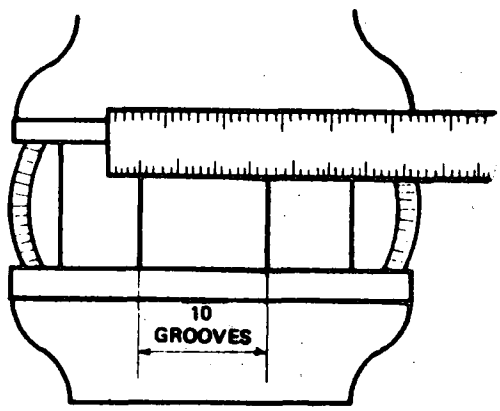

Fig. 6

4th Step - *Cut*, thus:

a) Position the tool to cut the first groove.

b) Set the cutting depth on the clapper box to suit the depth of the groove.

OBSERVATION

If necessary, make several runs.

c) Stop the machine, raise the tool, and take it to the reference mark corresponding to the first run.

d) Move the table the number of divisions needed for the pitch.

e) Use the same method for the second, and for all successive grooves.

This operation consists of machining lateral slots into straight slots. A "T" profile is thus obtained by means of bent cutting tools (Fig. 1).

These slots are generally made on machine tables, on which swivel vices are mounted for holding parts and accessories.

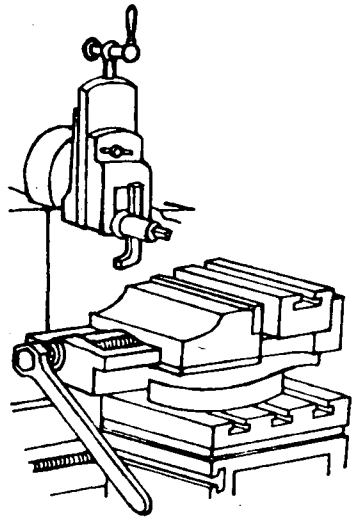

ig. 1

PROCEDURE

1st Step - *Layout.*
2nd Step - *Clamp the workpiece.*
3rd Step - *Machine a straight slot.*

OBSERVATION

If the straight slot is already there, clamp the workpiece and align it with the dial indicator, as follows:-

1) Place the indicator on the tool post.
2) Fasten it to the clapper.
3) Move the table, lower the clapper until the plunger of the indicator touches one of the lateral surfaces of the slot. Allow the indicator hand to turn once or twice (Fig. 2).

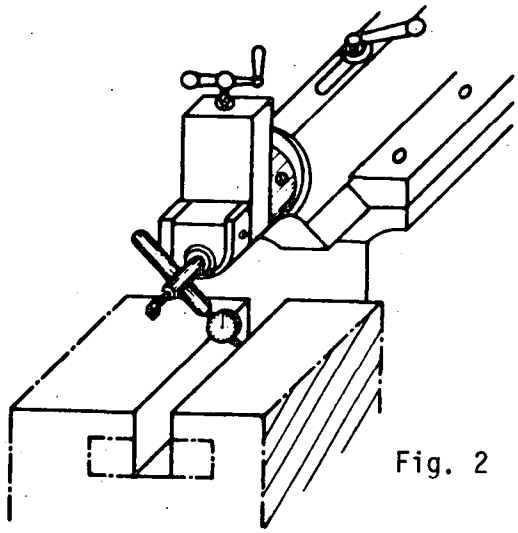

Fig. 2

4) Move the ram slowly, by hand, until the plunger of the indicator travels the full length of the surface. It should not go beyond that length.
5) Note the difference. Make the necessary corrections. To do so, loosen or tighten the bolts on the swivel base of the vice.
6) Adjust the indicator ring to "0".
7) Fasten the vice.

4th Step - *Select the tools.*

OBSERVATION

The tools should enter freely into the groove (Fig. 3).

5th Step - *Fasten the tool.*

OBSERVATIONS

1) The tool should overhang from the tool post as little as possible.
2) The cutting tool should be in a vertical position (Fig. 4).

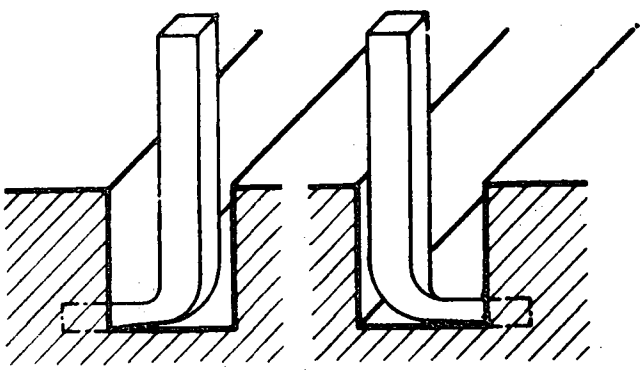

Fig. 3

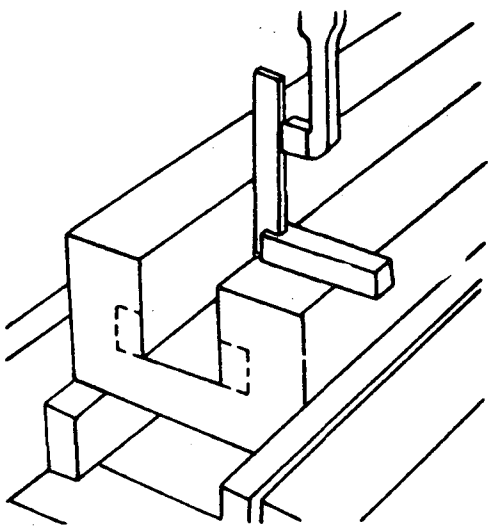

Fig. 4

6th Step - *Fasten the tool post,* insert the fastener bolt (Fig. 5).

7th Step - *Machine a groove on one side,* thus:

a) Adjust the travel of the clapper.
b) Set the number of strokes.
c) Place the tool in the groove at the proper height and adjust the ram.
d) Move the table until the cutting tool touches the lateral surface of the groove and make the "0" on the ring of the table coincide with the reference point.

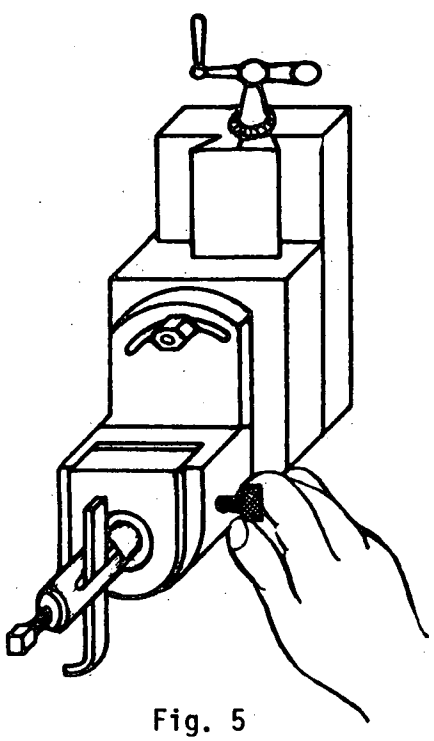

Fig. 5

e) Move the clapper box by hand until the tool leaves the groove.

f) Adjust the depth of cut by turning the table elevating crank.

8th Step - *Start the machine.*

a) Progress with cutting while constantly moving the table across until the desired lateral depth is reached.

OBSERVATIONS

1) The depth of cut is given during the return stroke of the ram.

2) In case the cutting tool is narrower than the width of the groove, return the table to the starting point (Fig. 6), lift or lower the clapper and continue cutting until the groove reaches the desired width.

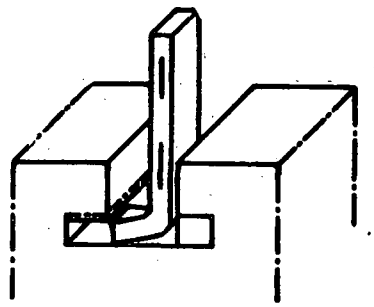

Fig. 6

9th Step - *Check measurements.*

10th Step - *Machine the opposite side* thus:

a) Change the tool.

b) Repeat the steps of the above case.

CBC

OPERATION:

REAMING WITH THE TAPER REAMER (BY HAND)

This is an operation by which a hole is finished in dimension, form and surface quality by means of turning and feeding a tapered tool with straight or spiralled cutting edges into the hole (Fig. 1).

It is used to obtain standard holes, mainly in mass production for housing taper bolts, shafts or bushings.

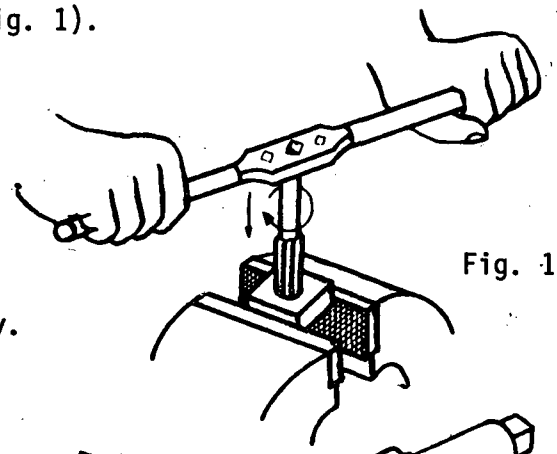

Fig. 1

PROCEDURE

1st Step - *Clamp the workpiece*, if necessary.

2nd Step - *Select* the reamer, thus:-

a) Measure the diameter of the hole.

b) Take a reamer with the necessary taper.

c) Measure the diameter of the reamer as shown in Figure 2. It should coincide with the diameter of the hole.

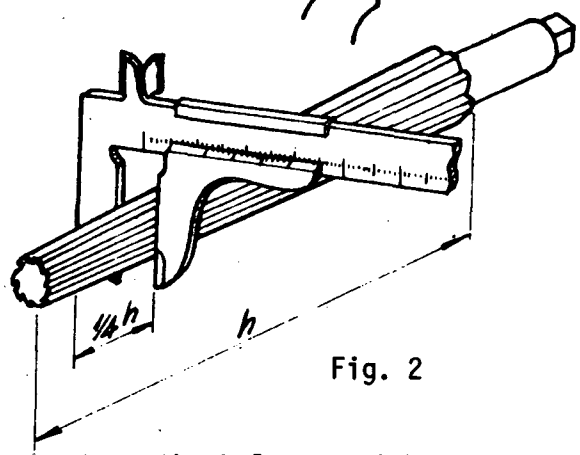

Fig. 2

d) Check if the selected reamer enters the hole enough to remain balanced. If not, select another which goes further in.

3rd Step - *Select the tap wrench.*

OBSERVATION

The length and the weight of the tap wrench should be suitable for the diameter of the reamer.

4th Step - *Feed the reamer in* thus:

a) Fit the reamer in the tap wrench.

b) Lubricate the reamer with a fine brush.

OBSERVATION

For bronze and cast iron it is fed dry.

For other metals, check the cutting fluids table.

c) Place the reamer in the hole so that the axes of both hole and reamer are in line (Fig. 3).

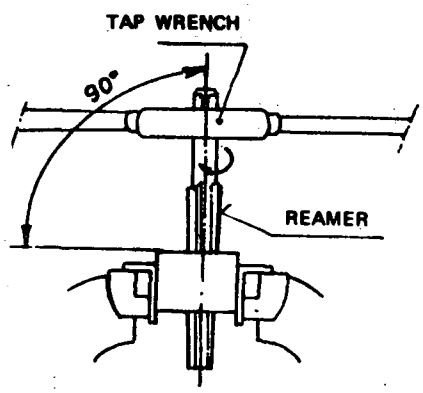

Fig. 3

d) Begin reaming, by turning clockwise slowly and steadily while applying pressure lightly (Fig. 4).

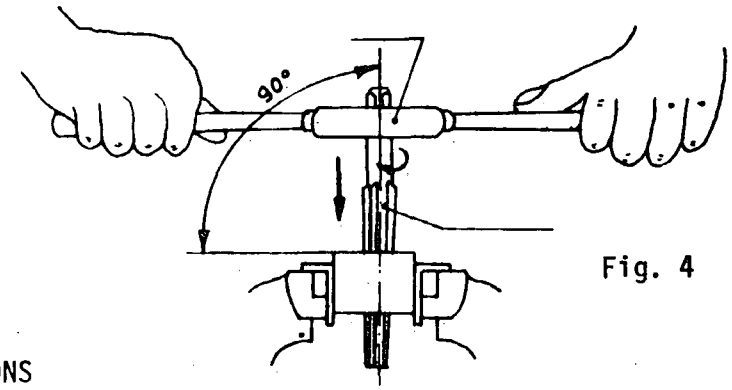

Fig. 4

OBSERVATIONS

1. Keep turning the reamer (clockwise), otherwise the chips between the flutes might dull the cutting edges.
2. In the case of holes with large diameters, a roughing reamer should first be used (Fig. 5).

Fig. 5

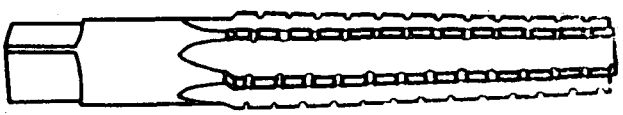

e) Continue feeding in the reamer. Check the penetration periodically with the part to be inserted or with a model taper (Figures 6 and 7).

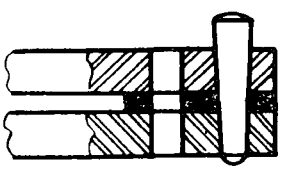

Fig. 6

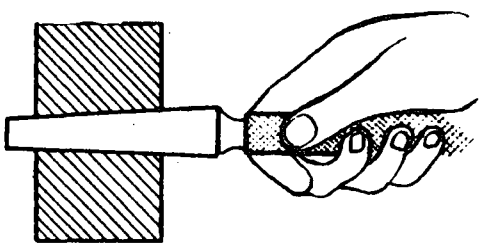

Fig. 7

OBSERVATIONS

1. When removing the reamer, it should also be turned clockwise. At the same time, pull upwards.
2. After removing the reamer always clean the flutes with a fine brush.

5th Step - *Carry out the final check* thus:

a) Remove the reamer.
b) Clean the hole.
c) Insert the taper gauge or the part (Figs. 6 and 7).
d) Ream again, if necessary.

CBC	OPERATION: REAMING WITH THE ADJUSTABLE REAMER	REF. OS.29/MF	1/2
		Caribbean	

This is an operation identical to that of the non-adjustable reamer, with regards its purpose. But, because of its adjustable size (diameter) it can be used for a wide variety of hole sizes.

PROCEDURE

1st Step - *Measure the hole* and select the reamer to be used.

OBSERVATION

The sizes of the hole should be within the maximum and minimum limits of the reamer.

2nd Step - *Clamp the workpiece,* if necessary.

3rd Step - *Select the tap wrench.*

OBSERVATION

The tap wrench should be suitable for the diameter of the reamer.

4th Step - *Adjust the reamer to the hole, thus:-*

a) Check if the diameter of the reamer should be increased or reduced, comparing it with the diameter of the hole.

b) Hold the reamer in the vice by its shank.

c) Increase or reduce the diameter of the reamer by loosening one nut and tightening the other (Fig. 1).

OBSERVATIONS

1. To increase the diameter, loosen the top nut and tighten the lower one.
   To reduce the diameter, do the opposite.

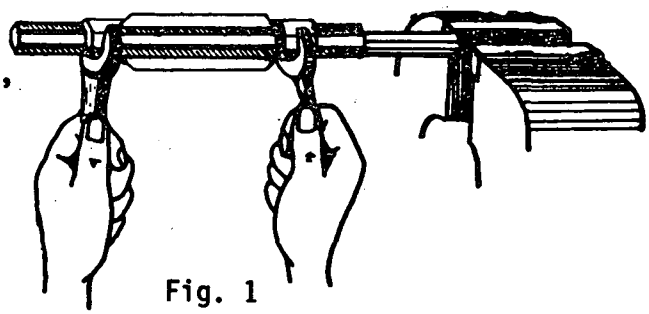

Fig. 1

2. In the case of a collapsible reamer, the adjusting nut is turned to the right or to the left, depending on the need (Fig. 2).

Fig. 2

5th Step - *Feed the reamer in,* thus:

a) Fit the reamer in the tap wrench.

b) Lubricate the reamer. Use a fine brush to do so.

OBSERVATION

To select the cutting fluid, check the table.

c) Place the reamer in the hole. The axis of the reamer should be perpendicular (Fig. 3).

d) Begin the operation by turning clockwise slowly and steadily while applying a light pressure.

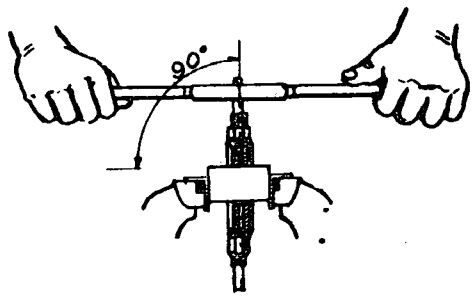

Fig. 3

e) Feed in the reamer completely.

f) Remove the reamer by continuing turning clockwise.

6th Step - *Check the size of the hole,* thus:

a) Clean the hole.

b) Measure the size of the hole. For this, use an inside micrometer or a plug gauge (Figs. 4 and 5).

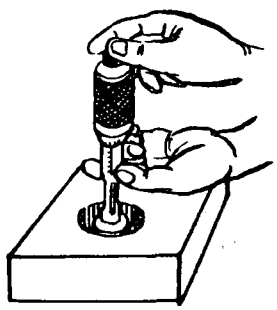

Fig. 4

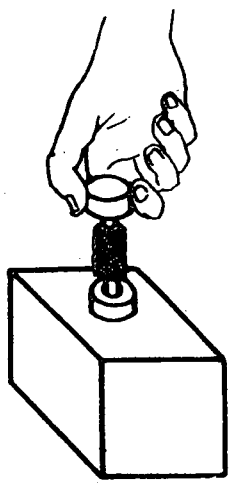

Fig. 5

7th Step - *Repeat Steps 5 and 6,* if necessary, until the proper size is reached.

8th Step - *Carry out a final check.*

This is a manual finishing operation. It is done with a tool called a scraper and the purpose is to remove irregularities from the machined surfaces. This increases the contact points when the finished surfaces do not satisfy the required conditions (Fig. 1). This operation is applied to the guides of machine carriages, supports and bearings.

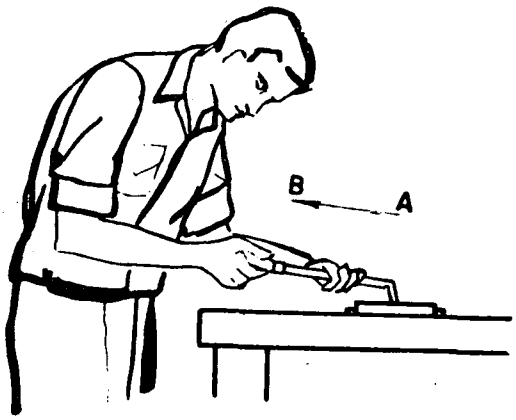

Fig. 1

PROCEDURE

1st Step - *Secure the workpiece.*

OBSERVATION

When the workpiece cannot be held in a vice, place it at a convenient height.

2nd Step - *Scrape*

OBSERVATIONS

1 Scraping is done by making short strokes and applying strong pressure on the scraper. The scraper should form a 45° angle (Fig. 2).

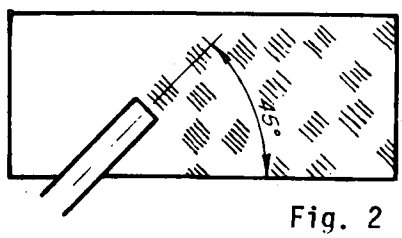

Fig. 2

2 The working direction of the scraper should be varied frequently to 90°. Doing this, detects the unevenness more easily (Fig. 3).

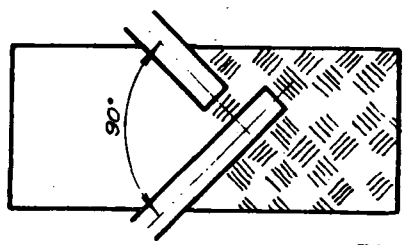

Fig. 3

3 Scraping is done to eliminate the irregularities left by the cutting tool.

3rd Step - *Indicate the irregularities of the surface* thus:

a) Select the checking device.

OBSERVATION

The checking device depends on the form and size of the surface to be scraped (Figs. 4, 5 and 6).

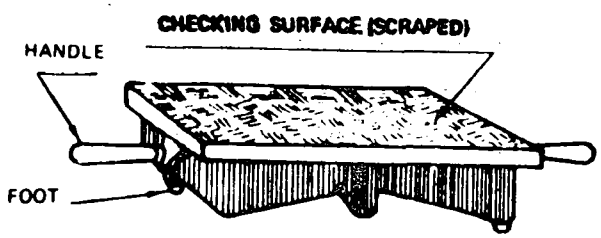

Fig. 4

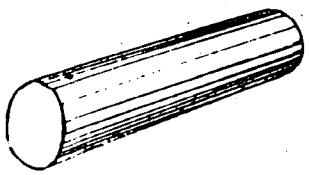

Fig. 5

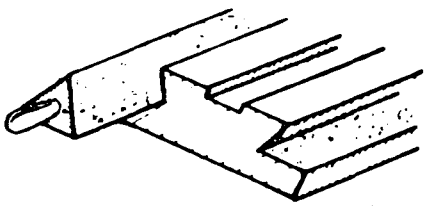

Fig. 6

b) Cover the surface of the checking device with a light coat or Prussian blue or minium.

OBSERVATION

1 The coat of Prussian blue or minium is applied with a piece of linen cloth.

2 The consistency of the Prussian blue or minium should be such as not to run on the surface of the checking device.

c) Lightly rub the surface to be scraped against the dyed surface of the checking device (Fig. 7).

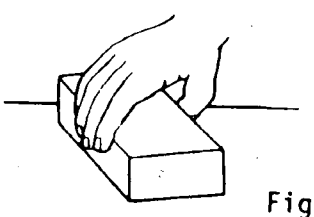

Fig. 7

OBSERVATION

The surface of the part to be checked should be moved over the datum surface. This ensures an even scraping on the entire surface.

4th Step - *Scrape* (Figs. 8 and 9).

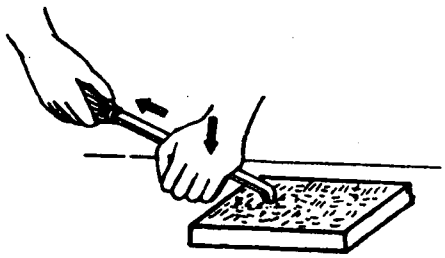

Fig. 8

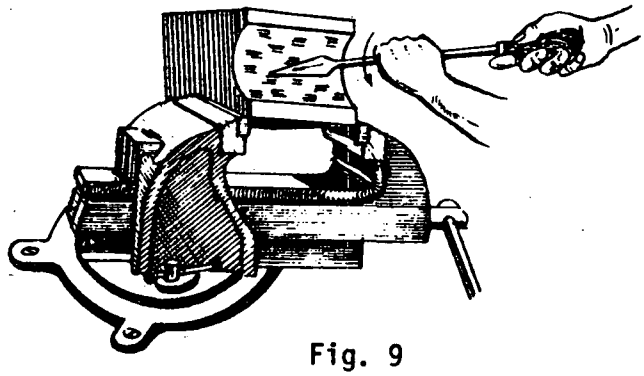

Fig. 9

OBSERVATIONS

1 Scraping is done on the stains left on the surface.

2 The quality of the finished surface will be much better when there is a greater amount of points per square centimetre.

3 To improve the finish of the surface, scraping of the points during the final steps, should be done in different directions (Fig. 10).

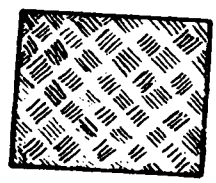

Fig. 10

5th Step - *Check* the scraped surface. If necessary, repeat steps 3 and 4 to obtain the required number of points per square centimetre.

CBC

OPERATION:
MOUNTING BUSHINGS

This consists of placing an intermediary part (bushing) between a shaft and a supporting body (Fig. 1). These parts have a low friction coefficient and, when worn, are easily changed without damaging the principal mechanism. This allows a more economical repair. They are generally mounted on shafts or lodging holes by applying pressure. Bushings are frequently used in machine assemblies.

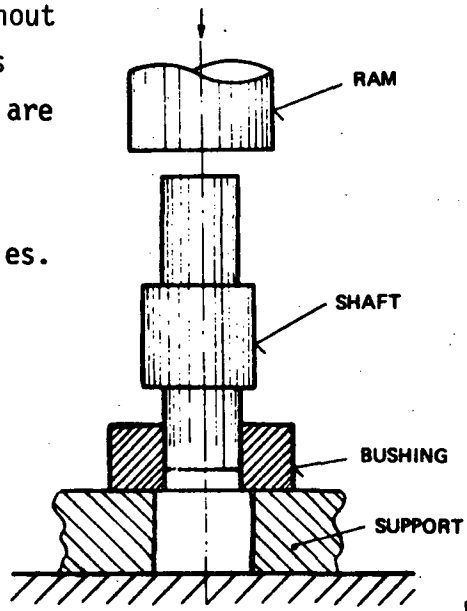

Fig. 1

PROCEDURE

1st Step - *Clean the parts*

OBSERVATION

In the cases of greased parts, these are washed in solvents (kerosene, gas oil) with a brush.

2nd Step - *Remove the rough edges and roughness* in the housing and on the shaft.

3rd Step - *Lubricate the contact surfaces* of both parts.

4th Step - *Mount the bushing* thus:

a) Put the end of the bushing in the part (Fig. 2).

b) Align the bushing square with the reference face (Fig. 3).

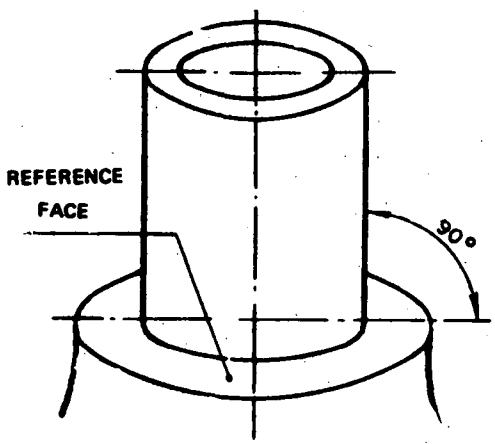

Fig. 3

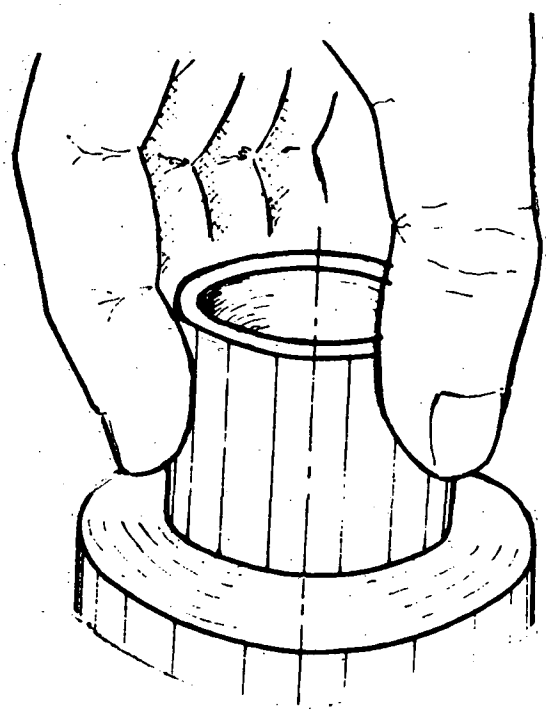

Fig. 2

c) Put a clean, flat and smooth support on the bushing.

d) Put the part on the table of the press.

OBSERVATION

If necessary, use a flat base for supporting the part.

e) Begin applying pressure and check if the bushing enters correctly aligned.

f) Complete the operation by completely pressing the bushing.

OBSERVATIONS

1 If it is not possible to carry out the operation with a press, an assembly as the one shown in Figure 4, can be used.

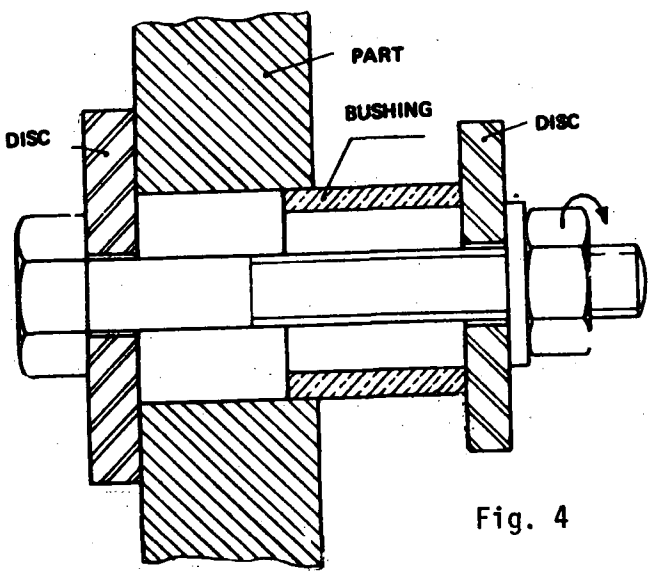

Fig. 4

2. If none of the above-mentioned procedures can be used, mount the bushing using a hammer. Protect the bushing with a piece of wood.

This consists of removing and mounting bearings on shafts, bearing-boxes and others. The purpose is to carry out cleaning, lubrication or replacement. This guarantees the proper functioning of machines and equipment in general.

PROCEDURE

I - REMOVING BEARINGS

1st Step - *Remove the bearing* (Figs. 1, 2 and 3): thus:

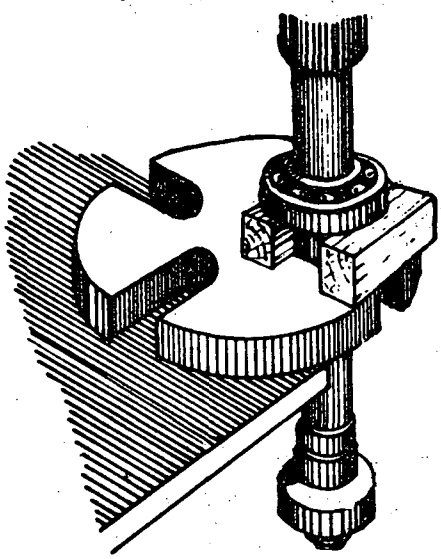

Fig. 1

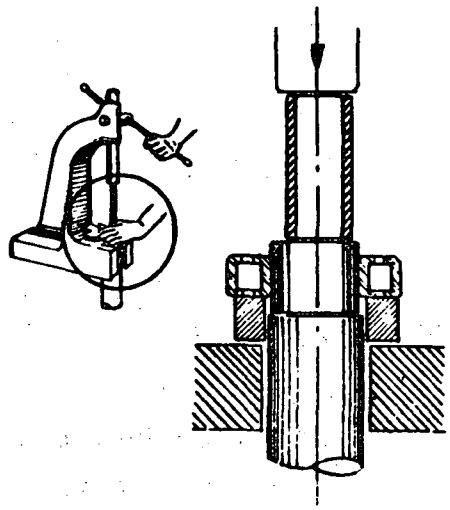

Fig. 2

a) In the press (Figs. 1 and 2), rest the inner ring on supports when removing a bearing from a shaft;

b) Using an extractor (Fig. 3) done when the parts cannot be taken to the press.

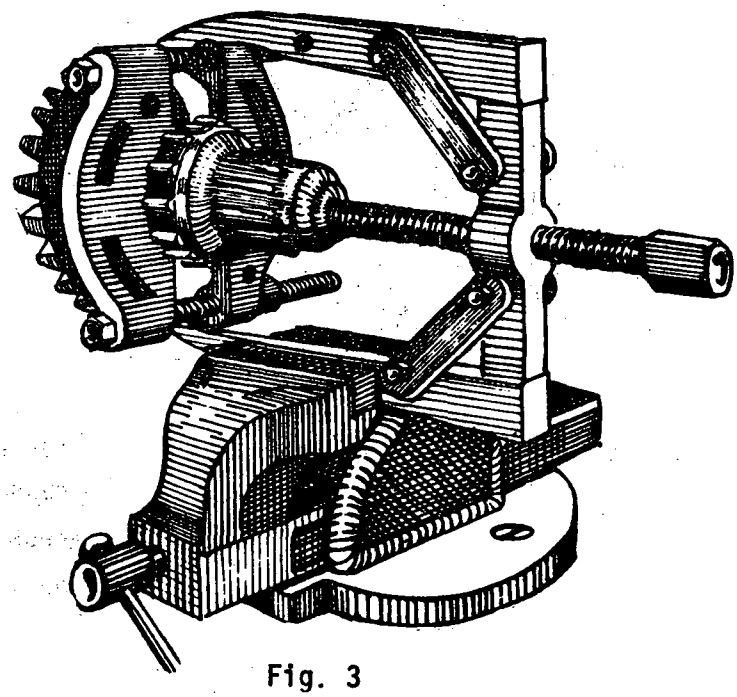

Fig. 3

OBSERVATIONS

1 In the case of bearings mounted on shafts, the pull should be made on the inner ring.

2 In the case of bearings mounted in housings, the pull should be made on the outer ring.

2nd Step - *Wash the bearing* thus:

a) Allow the bearing to remain some time in the liquid. Wash off the dirt with a brush.

b) Dip it immediately in a cleaner solvent. Move it with an oscillating motion spinning it at the same time.

c) Wash it once again in clean solvent.

d) Dry the bearing with compressed air or allow it to drain on a piece of linen cloth.

3rd Step - *Lubricate the bearing*. Mount or store it, if such is the case. Protect it from foreign matter.

II - MOUNTING BEARINGS

1st Step - *Clean the parts and the bearing* with a piece of linen cloth.

OBSERVATION

If the bearings were stored but improperly protected, or because of the time in storage are dry, wash them with the appropriate solvent.

2nd Step - *Mount the bearings* thus: (Figs. 4 to 7)

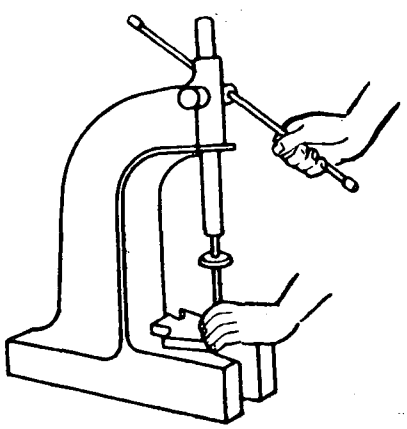

Fig. 4 Rack press

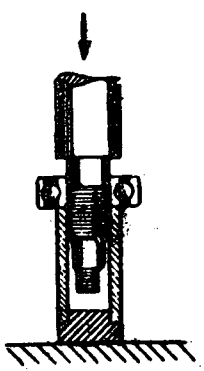

Fig. 5 Mounting the bearing in the press using a pipe for applying pressure on the inner ring. (Mounting bearing on a shaft).

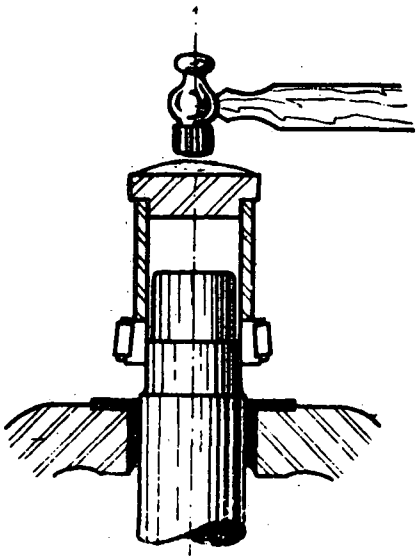

Fig. 6 In the vice with the aid of a pipe, support and hammer.

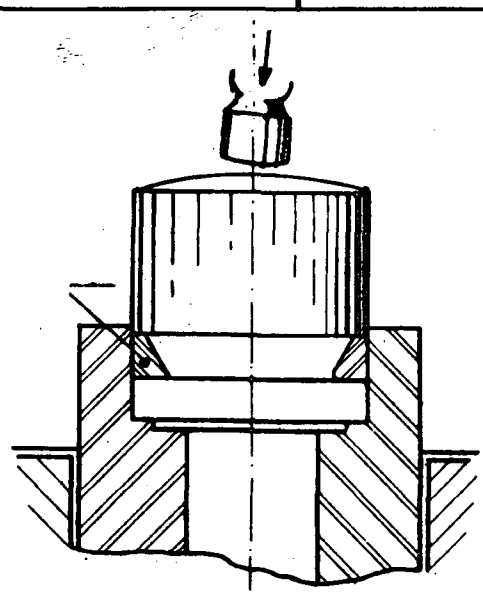

Fig. 7 In the vice with the aid of the turned cylinder used for applying pressure on the outer ring (mounting in a housing).

OBSERVATIONS

1 In the case of double row bearings, lubricate the inner face of the inner row.

2 Use the press whenever possible.

3 It is important to bear in mind that the insertion of the bearing on the part, by impact or compression should be uniform. This will ensure the proper seating of the bearing in its lodging.

3rd Ste - *Lubricate:*

a) With the appropriate grease, free of dust or other foreign matter. Hands must be clean;

b) With oil when there is a lodgement with retainer. This stops the oil from flowing out (Fig. 8).

OBSERVATIONS

1 When the bearings are mounted on machine parts and stored for some time awaiting final installation, they should be lubricated and protected with a special paper or cloth.

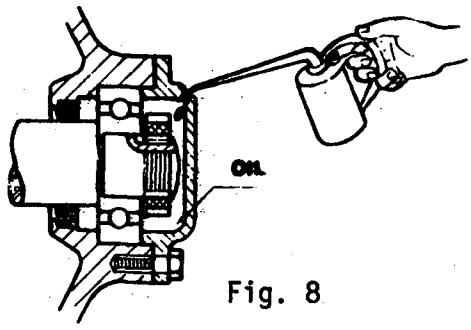

Fig. 8

2 In the case of mounting shielded bearings, a final lubrication should be done before mounting them.

CBC	OPERATION: ALIGNING TRANSMISSION DEVICES	REF. OS.33/MF	1/3
		Caribbean	

This consists of installing transmission devices such as: pulleys, shafts, bearings and gears with their axes in a determined alignment.
This is done to pumps, belt and gear transmissions, machine parts and others with the purpose of avoiding excessive friction wear and heat which would damage machine parts.

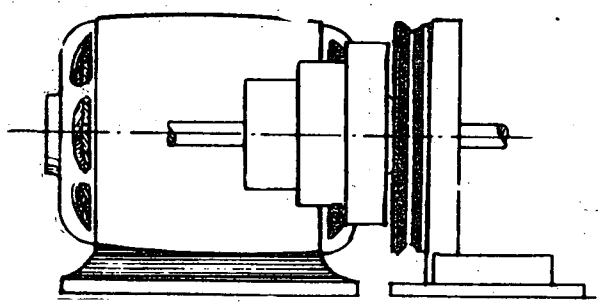

Fig. 1

PROCEDURE

I ALIGNING PULLEYS

1st Step - *Loosen the bolts* sufficiently to allow the easy movement of the units.

2nd Step - *Check* if both pulleys are square in relation with the same plane (Fig. 1). If necessary, correct by using wedges and blocks under the base of the motor or the supports of the shafts.

OBSERVATION
A level may be used when positioning transmissions with horizontal shafts.

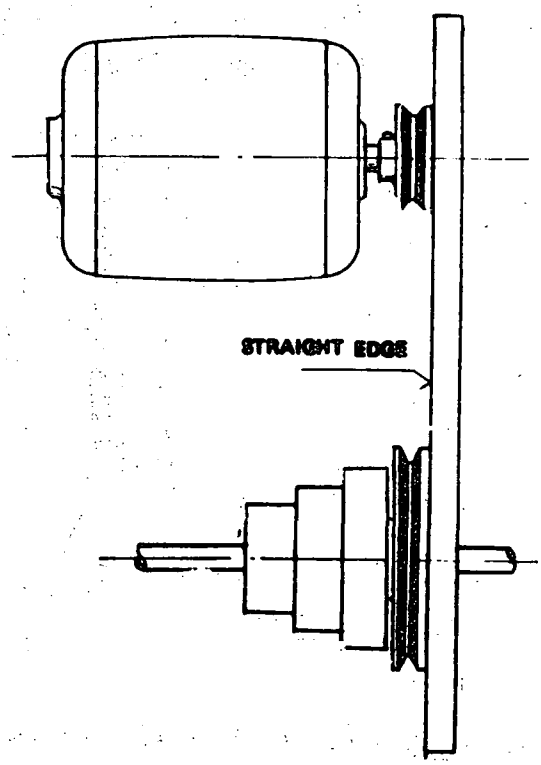

Fig. 2

3rd Step - *Align the pulleys* with a straight edge (Fig. 2) and tighten the securing bolts of the units.

OBSERVATIONS

1 When the pulleys are large and far apart, a very taut cord drawn across the face of one of the pulleys can be used instead of the straight edge (Fig. 3).

2 When the transmission is in a vertical plane, the alignment is done with a plumb line.

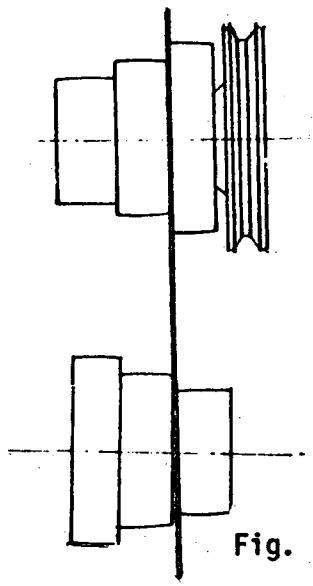

Fig. 3

II ALIGNING SHAFTS

1st Step - *Place both units* in position (Fig. 4) and carry out a preliminary alignment.

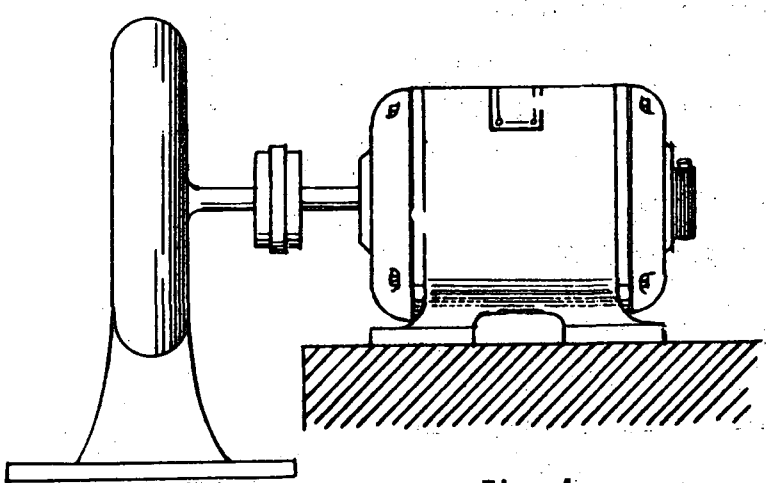

Fig. 4

2nd Step - *Level, then tighten the securing bolts* of one unit, preferably the highest one.

3rd Step - *Level the other unit* using wedges and blocks if necessary until the centres coincide and are aligned.

4th Step - *Tighten the securing bolts.* Check to ensure that the alignment has not shifted.

5th Step - *Couple the units* provisionally, and check by hand if the shafts turn freely.

6th Step - *Correct* if necessary by removing or adding more wedges. Make the definite coupling.

OBSERVATION

The alignment of parallel shafts (Fig. 5) is done by first securing one in its working position. Then, the other is aligned using a template (Fig. 6) or a dial indicator (Fig. 7).
This should be done for high precision assemblies.

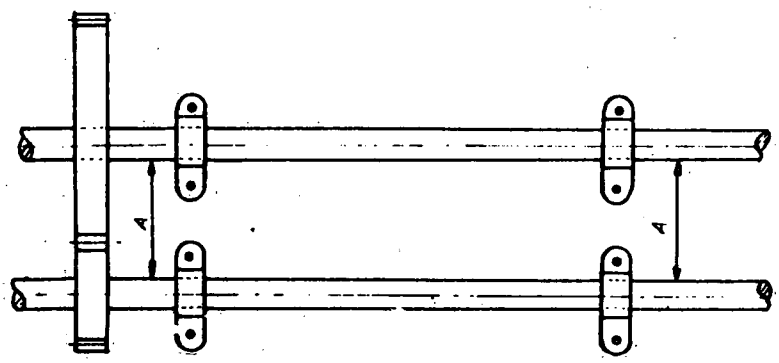

Fig. 5

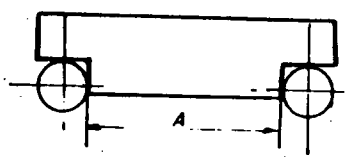

Fig. 6

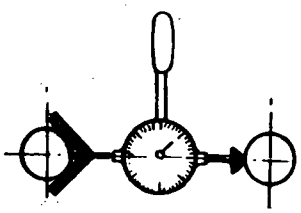

Fig. 7

TECHNOLOGICAL INFORMATION SHEETS

This is a clamping device. It is formed by two jaws, one fixed and another which moves by the action of a nut and screw (Fig. 1).

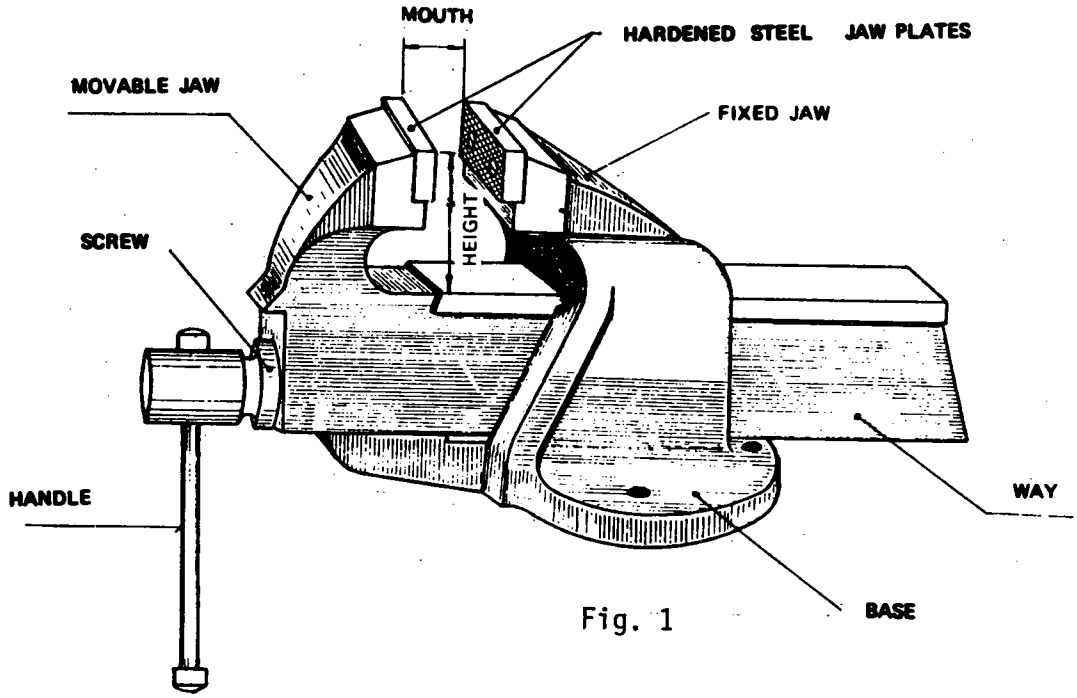

Fig. 1

The plates of the jaws are serrated to ensure a better grip of the parts. In certain cases, the jaws are covered with protecting soft jaws. These are made of soft metal which keep the serrations from marking the finished faces. Vices can be made of steel or cast iron, of different types and sizes. They are of fixed (Fig. 2) and swivel base (Fig. 3).

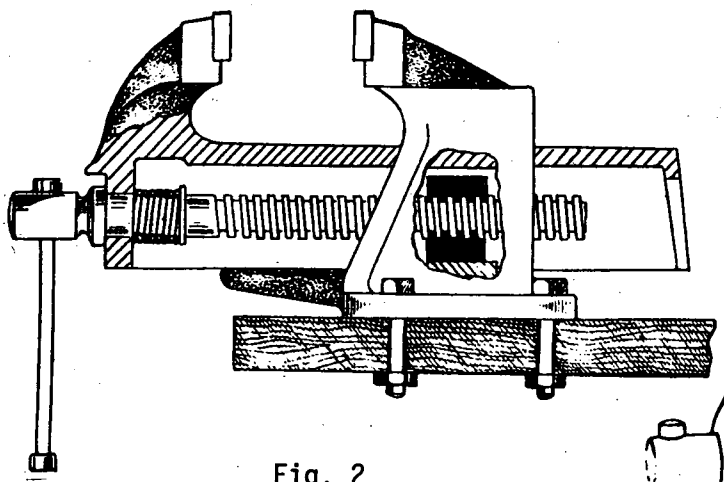

Fig. 2

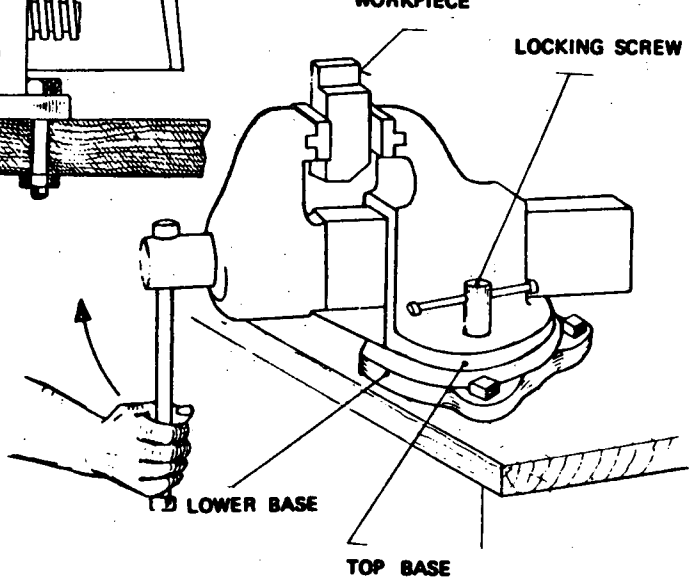

Fig. 3

Commercially, vices are found bearing a number and its equivalent in mm. This equivalent corresponds to the width of the jaws.

Table

No	Width of the Jaws (mm)
1	80
2	90
3	105
4	115
5	130

Conditions of use

The vice should be secured to the bench at a convenient height.

Care

The vice should be well greased. This ensures a better movement of the jaw and screw. Clean the vice after use.

Soft jaws

These are made of a material softer than the one to be held. This material may be lead, aluminum, copper or wood (Fig. 4).

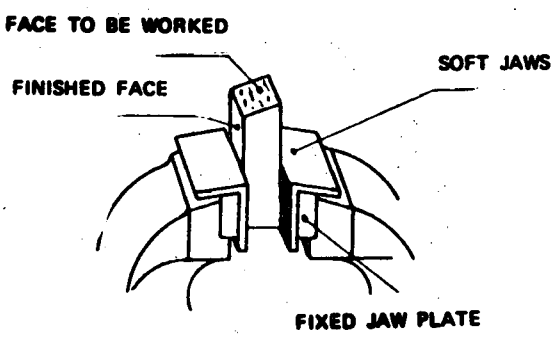

Fig. 4

CBC

TECHNOLOGICAL INFORMATION
THE PRECISION STRAIGHT EDGE

This is a precision instrument made of steel or cast iron in different shapes and sizes. It is used for checking flat surfaces and is classified into two groups:

straight edge with ground edges
straight edge with ground or scraped faces

STRAIGHT EDGE WITH GROUND EDGE

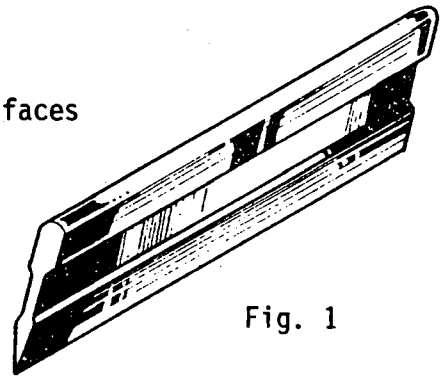

Fig. 1

bevelled it is made of carbon steel in the form of a blade (Fig. 1), hardened and rectified. The edge is slightly round. It is used for checking all classes of flat surfaces.

Fig. 2

triangular it is made of carbon steel and its section is triangular (Fig. 2) with a concave fluting down the centre and length of each face.
It is hardened, ground and the edges are slightly rounded. It is used for checking flat surfaces when the bevelled one cannot be used.

STRAIGHT EDGE WITH GROUND OR SCRAPED FACES

the flat-faced straight edge is made of cast iron. Its face is flat,

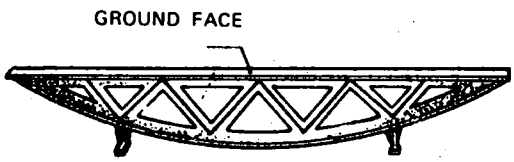

Fig. 3

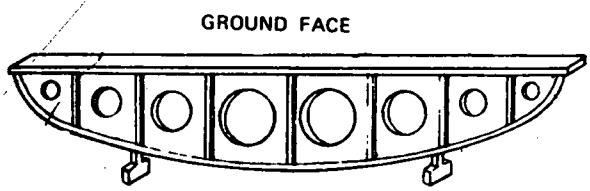

Fig. 4

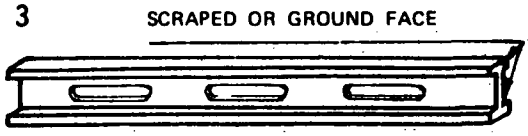

Fig. 5

ground or scraped (Figs. 3, 4 and 5). It is used for detecting the irregularities on flat surfaces which are to be scraped, such as the bed of lathes, etc.

the flat triangular straight edge is made of cast iron, of prismatic form with scraped or ground faces (Fig. 6). It is used for checking the flatness of two surfaces forming an acute angle equal to or larger than 60°. It determines the irregularities to be scraped.

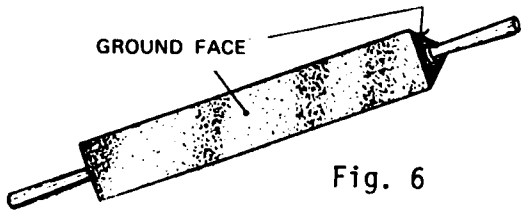

Fig. 6

DIMENSIONS

1. the straight edge should always be longer than the surface to be checked;
2. the manufacturer's catalogues give the dimensions of the straightedges which may be found on the market.

conditions of use before using the straight edge, check if the edges or faces are in perfect conditions.

CARE

a) keep the straight edge from hitting other tools, this may damage it;

b) clean, oil and store the straight edge in an appropriate case.

SUMMARY

PRECISION STRAIGHT EDGES	ground edge (hardened steel)	bevelled	checking with the edge
		triangular	
	ground or scraped faces (cast iron)	flat faces	checking with the face
		triangular flat	

CARE

the faces or edges should be in perfect conditions;
avoid contact with other tools;
clean, oil and store in an appropriate case.

This is a sturdy rectangular or square slab, made either from granite or cast iron with a perfectly flat surface (Figs. 1 and 2). This surface is the reference surface used for tracing with the surface gauge or checking flat surfaces.

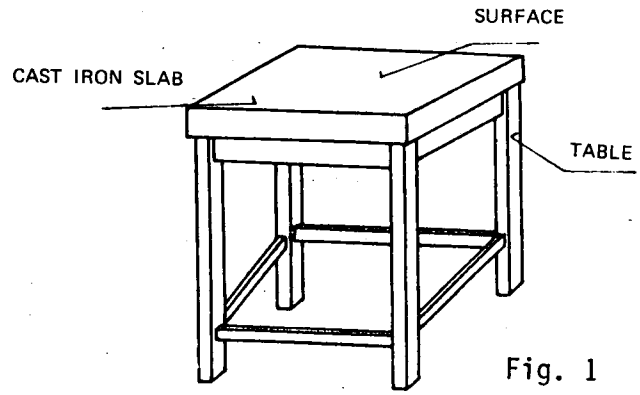

Fig. 1

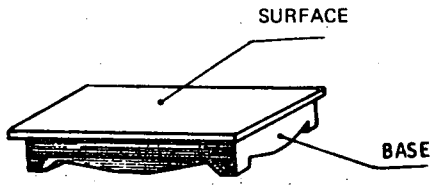

Fig. 2

LAYOUT TABLE

A portable or bench-type surface plate. This is a precision surface plate, smaller than the fixed ones, with two handles for lifting it, (Figs. 3 and 4).

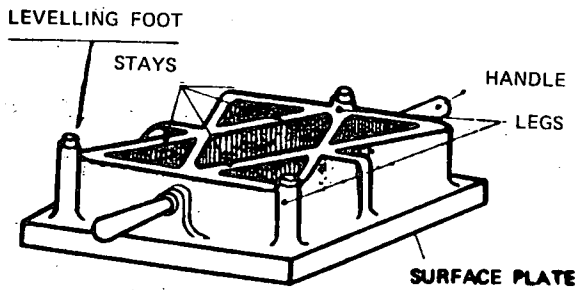

Fig. 3 Bottom view of portable surface plate

CONSTRUCTION

Layout tables and surface plates are built with extreme care and technical precision. Special quality cast-iron is used, and it is aged so as to be stress-free. The stays are designed and fitted to prevent warping, thus keeping the control surface level. The chart below shows the most common sizes of table.

SIZES (in mm)	
150 x 150	500 x 500
200 x 200	600 x 500
300 x 200	800 x 500
300 x 300	1000 x 750
400 x 300	1200 x 800
400 x 400	1000 x 1000
500 x 140	1500 x 1000
500 x 400	2000 x 1000

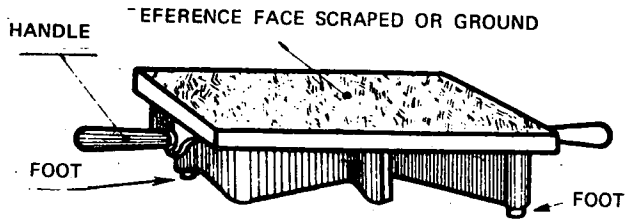

Fig. 4

CONDITIONS OF USE

They are precision devices which must be handled with great care. To get the proper results in checks and layouts it is essential that they are kept horizontal by using the levelling screws (Fig. 4).

CARE

After use, the layout table should be cleaned, oiled and protected with a wooden cover to protect it from blows.

S U M M A R Y

Layout table and surface plate: precision device, portable and fixed models.

Sturdy slab	special, stress-free, cast iron granite

Rectangular or square

Has a reference surface for marking and checking flat surfaces.
Has grooves to prevent warping.
Should be kept clean and protected.

These are colouring substances such as: varnish, zinc white, diluted gypsum, dried gypsum, copper sulphate, special black ink. These solutions are used for coating the surfaces of workpieces that are to be laid out, so that the markings will be clear. The type of solution to use depends on the surface of the material and the precision of the layout.

CHARACTERISTICS AND APPLICATIONS

Varnish A solution of rubber lacquer and alcohol to which aniline is added to give colour. It is used in precision marking out on smooth or polished surfaces.

Zinc White Solution Obtained by diluting zinc oxide in water. It is used for dying stock when the layout does not require much precision.

Diluted Gypsum A mixture of gypsum, water and ordinary carpenter's glue. For each kilogram of gypsum add 8 litres of water. Boil this mixture and afterwards add 50 grammes of glue dissolved separately. Add a little linseed oil and a drying substance to prevent the mixture from deteriorating. Apply it to the stock with a brush. For better results, apply the prepared solution with a paint sprayer.

Dried Gypsum Used in chalk form by rubbing it over the surface of the stock to be laid out. This is used in layouts which do not require much precision.

Copper sulphate Prepared by mixing three teaspoons of powered copper sulphate in a glass of water. It is applied with a brush to smooth steel or cast-iron workpieces for precision layout. It is necessary to take the following precautions with this solution:

a) Do not spill it on tools, as it causes rust.
b) Always wash your hands after using this solution.

CAUTION

REMEMBER THAT COPPER SULPHATE IS POISONOUS.

Special Black Ink Found already prepared commercially, and used on light-coloured metals such as aluminium.

S U M M A R Y

SUBSTANCE	*INGREDIENTS*	*SURFACES*	*TYPE OF MARKING*
Varnish	Rubber lacquer Alcohol Aniline	Smooth or polished	Precise
Zinc-White Solution	Zinc Oxide Water	Rough	Very Imprecise
Diluted Gypsum	Gypsum Water Carpenter's glue Linseed oil Drying agent	Rough	Very Imprecise
Dry Gypsum	Common chalk	Rough	Imprecise
Copper Sulphate solution *(Poisonous)*	Powdered copper Sulphate Water	Smooth Steel or Cast Iron	Precise
Special Black Ink	Commercially prepared	Light coloured Metals	Any degree of precision

CBC

TECHNOLOGICAL INFORMATION

THE STEEL RULE

REF. TIS.007 | 1/2

Caribbean

This is a strip of steel, usually rust-proof, used for measuring length (Fig. 1). It is graduated in units of the metric and/or the British system and is used for measurements which do not require accuracy beyond the smallest division on the scale of the rule (Figs. 2 and 3).

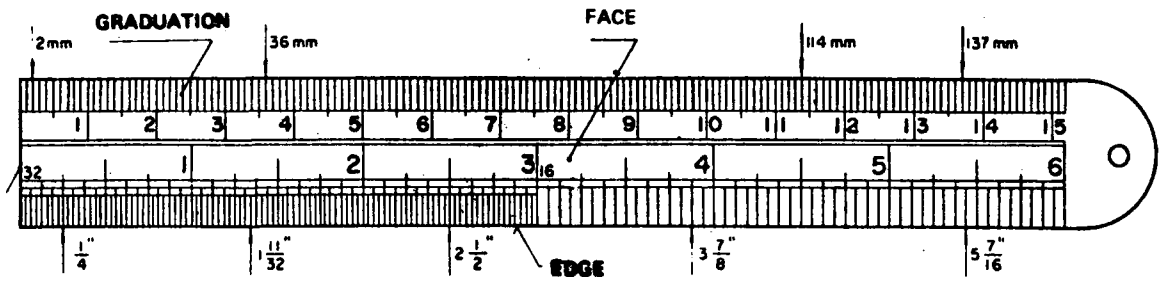

Fig. 1

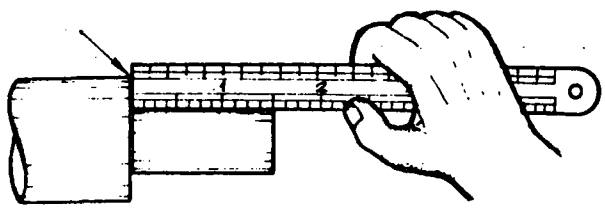

Fig. 2 Measuring length using reference surface

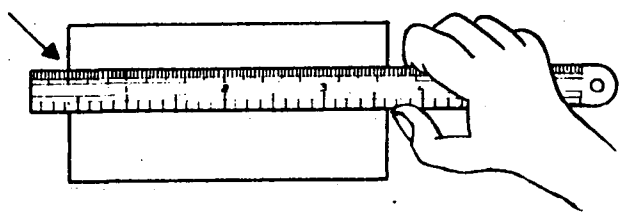

Fig. 3 Measuring length without using a reference surface.

Steel rules come in varying sizes. The most common are 150mm (6" approximately) and 305 mm (12" approximately).

TYPES

Besides the type in Fig. 1, there are others as shown in Figures 4, 5 and 6.

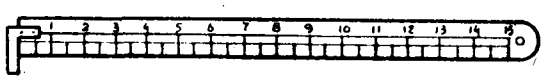

Fig. 4 Hook rule (internal).

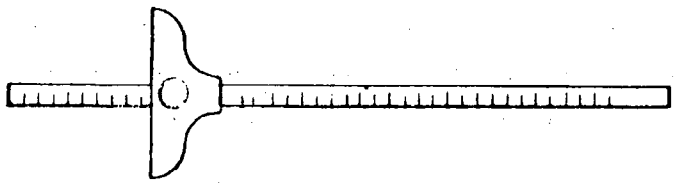

Fig. 5 Depth gauge

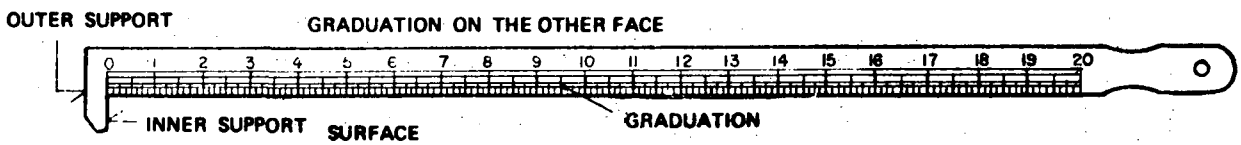

Fig. 6 Hook rule (used by blacksmith)

CONDITIONS OF USE

For accurate measuring, the hook of the rule must lie perfectly flat, and perpendicular to the edge.

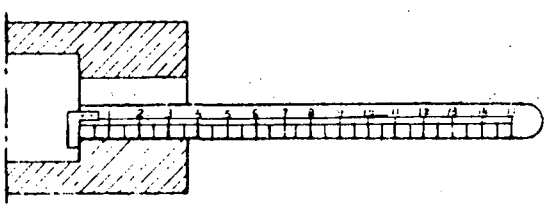

Fig. 7 Measuring lengths with the hook resting on an inside reference surface.

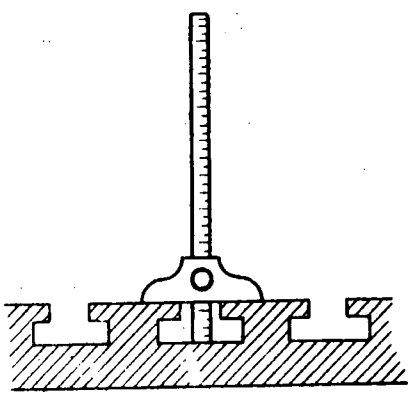

Fig. 8 Measuring the depth of grooves.

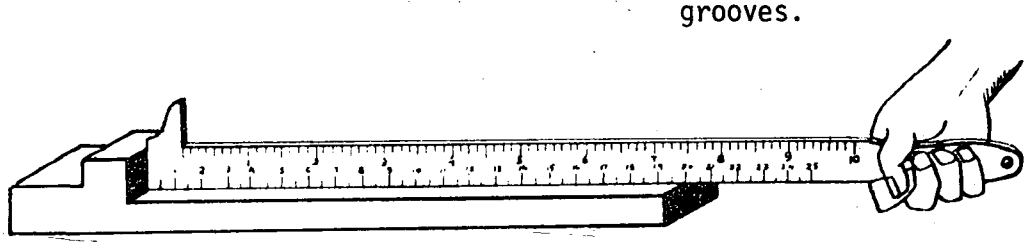

Fig. 9 Measuring using the outside face of the hook.

CARE

For best results:

1. Avoid dropping the rule.
2. Do not bend or twist it; it might warp or break.
3. Clean it with cotton waste after use, and protect it from rust by oiling whenever necessary.

CBC

TECHNOLOGICAL INFORMATION

HAMMERS AND MALLETS

REF. TIS.013 | 1/2

Caribbean

The HAMMER is a striking tool which consists of a carbon-steel head fitted onto a wooden handle. The parts which do the striking is hardened. The hammer is used in most industrial fields such as machinery fitting, construction, and the like. Hammers are characterized by their shape and weight.

Shapes

ball-peen hammer (Fig. 1)

peen hammers (Figs. 2, 3, and 4)

These are the types most commonly used in machine shops.

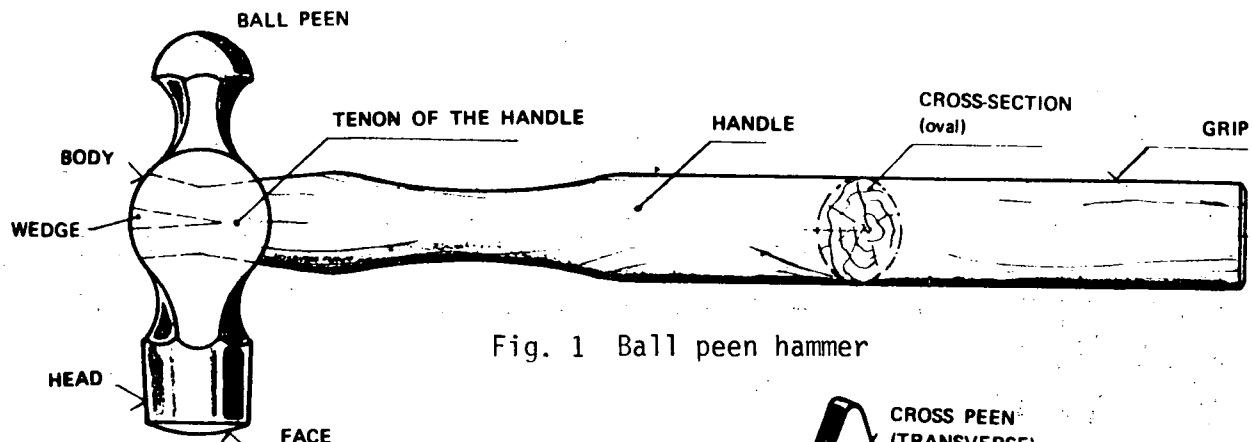

Fig. 1 Ball peen hammer

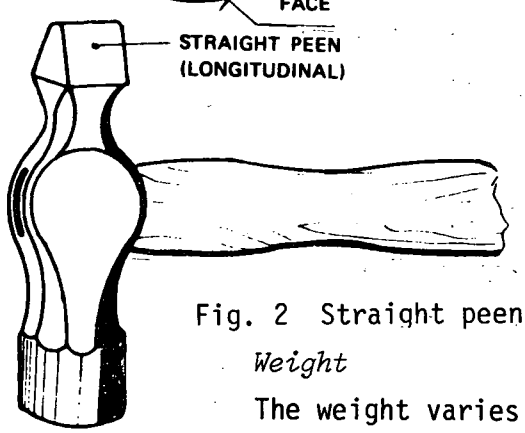

Fig. 2 Straight peen hammer

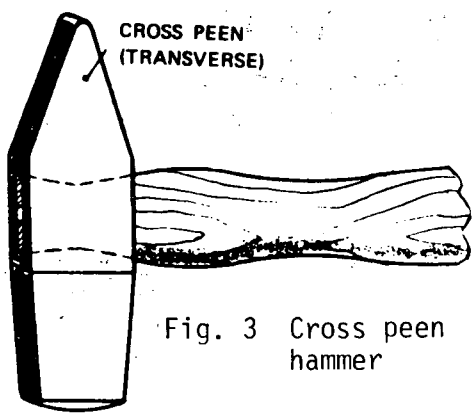

Fig. 3 Cross peen hammer

Weight

The weight varies from 200 to 1000 grammes.

Conditions of use

A hammer which is to be used should have a very good handle and should be well-fitted by means of the wedge.

Care

Do not use the handle either as a hammer or as a lever so as not to damage it.

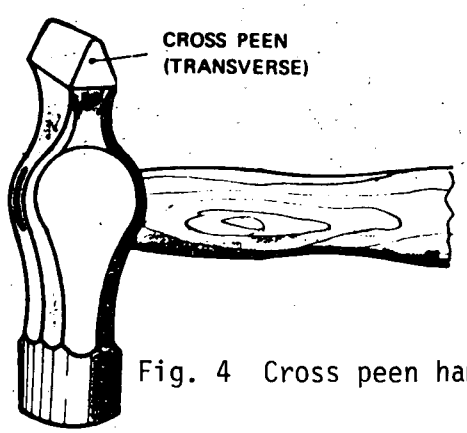

Fig. 4 Cross peen hammer

The MALLET is a striking tool, which consists of a wooden handle and a head which could be either wooden, aluminium, plastic, copper, lead or leather Figs. 5, 6 and 7).

It is used for hammering parts or materials when surfaces should not be damaged by the blows. The plastic or copper heads can be replaced when they are worn (Fig. 6).

Mallets are classified according to their weights and to the materials of which the heads are made.

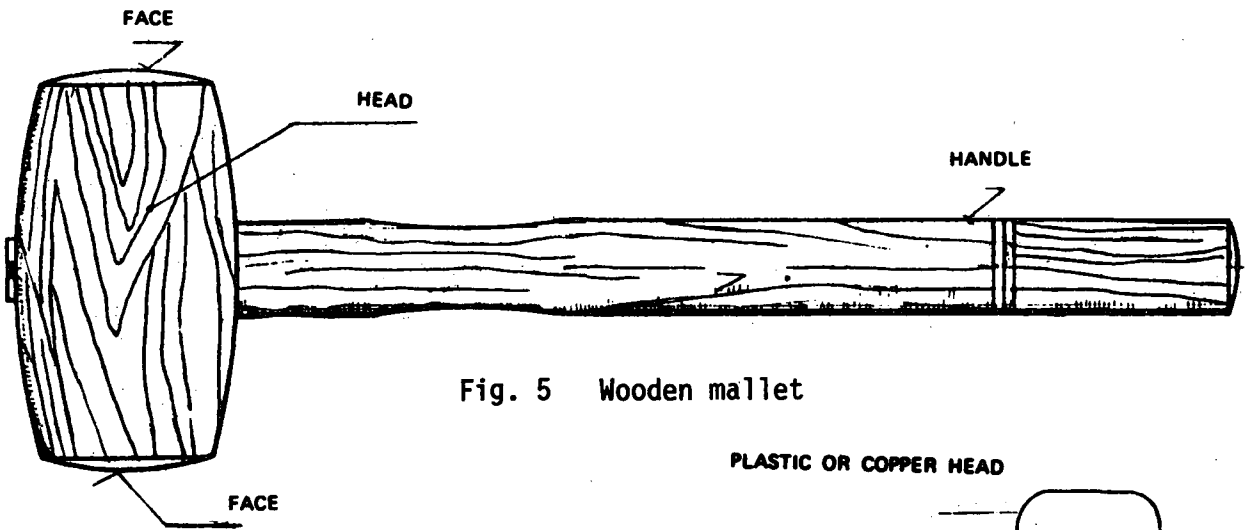

Fig. 5 Wooden mallet

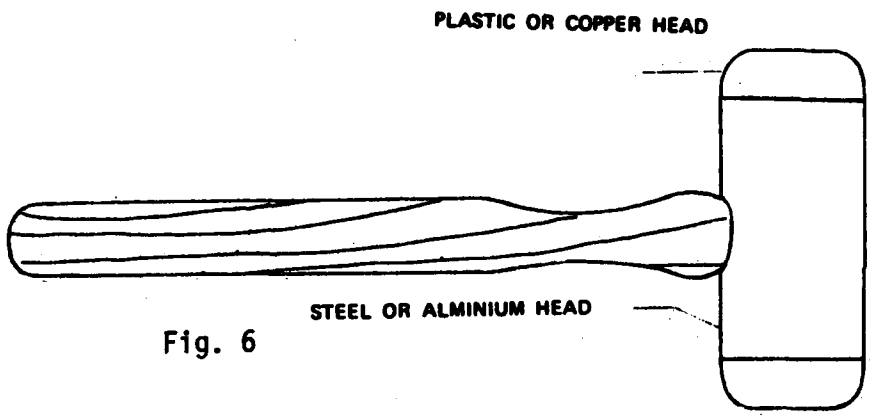

Fig. 6

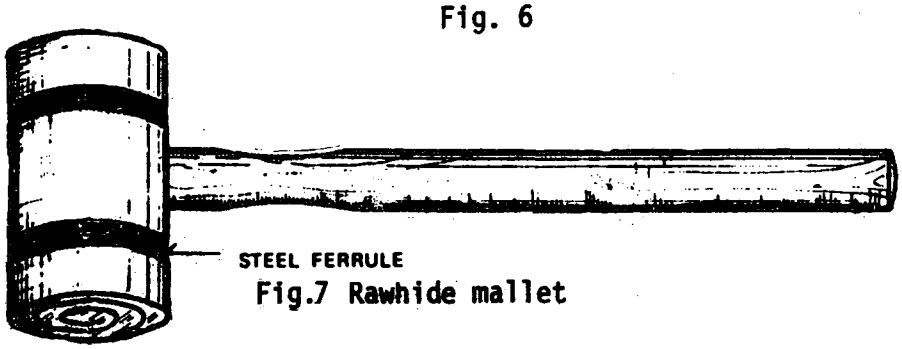

Fig.7 Rawhide mallet

Conditions of use

a) The head of the mallet should be free from burrs, and should fit firmly onto the handle.

b) Mallets should only be used on smooth surfaces.

CBC

TECHNOLOGICAL INFORMATION

HAND AND BENCH SHEARS

These are manual, cutting tools formed by two blades. They are usually made of carbon-steel, tempered and sharpened at a particular angle. The blades are connected and joined by means of a pivot (a screw with nuts). Shears are used for cutting thin metal. The angle of the blades can vary from 76° to 84° (Figs. 1 and 2).

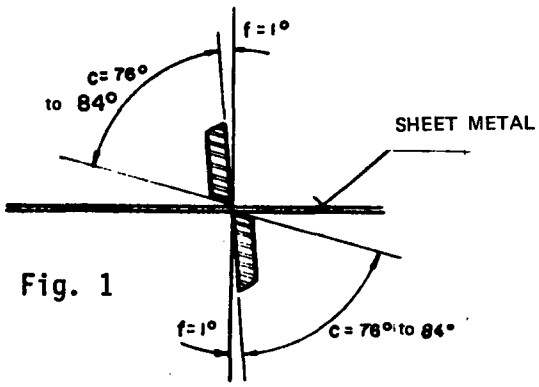

Fig. 1

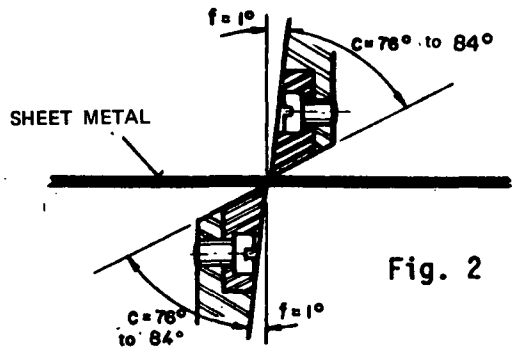

Fig. 2

Shears are classified by the shapes of their blades.

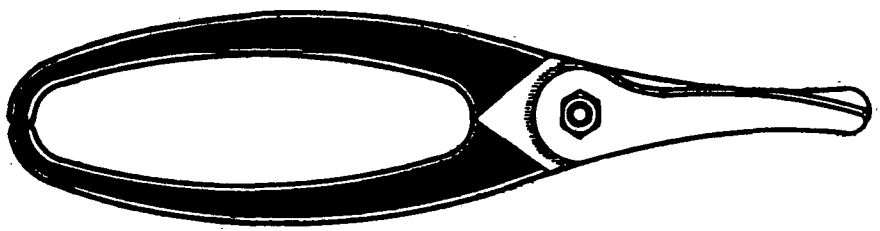

Fig. 3

Circular cutting snips (for small, circular cuts).

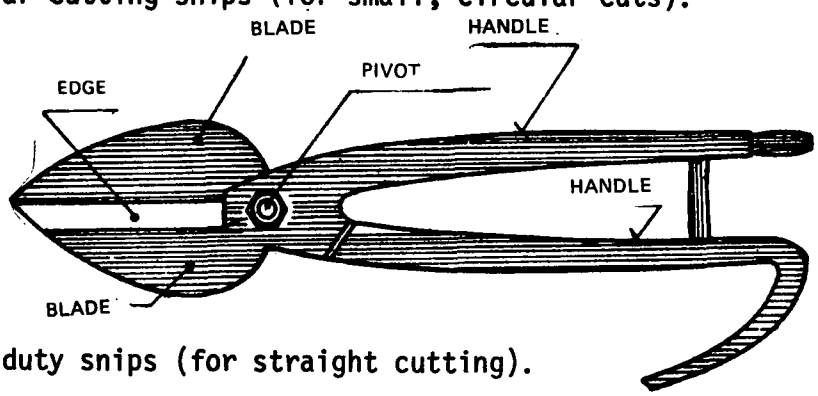

Fig. 4

Heavy duty snips (for straight cutting).

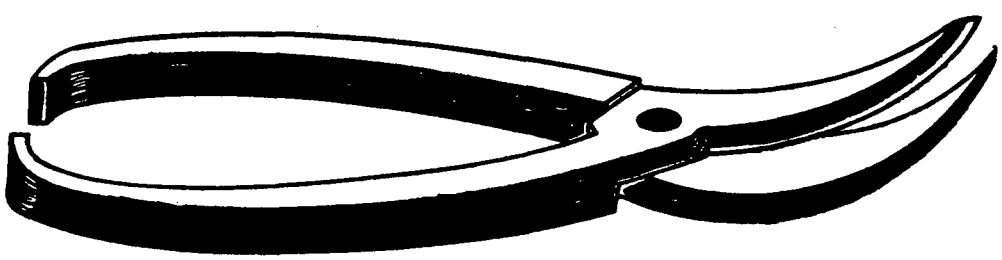

Fig. 5

Hawk-bill snips (for circular cuts).

Hand shears come in 6", 8", 10" and 12" sizes (total length of the handle plus the blade). Bench and guillotine shears are identified by the length of their blades (Figs. 6 and 7).

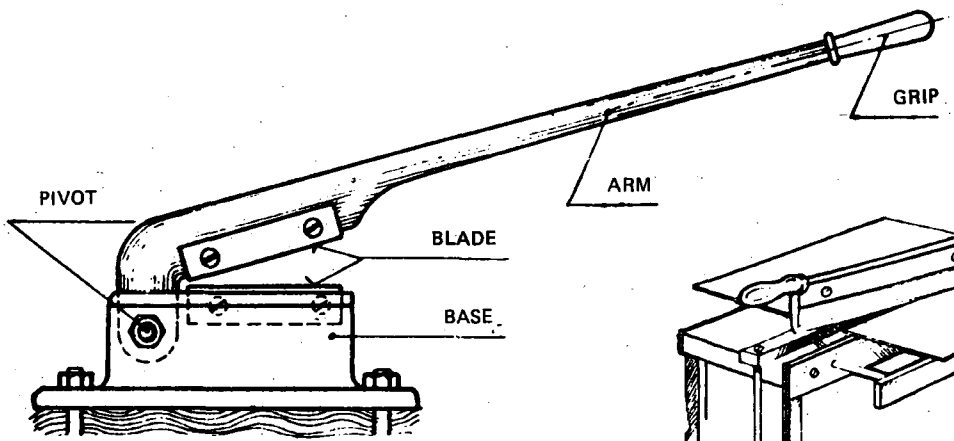

Fig. 6 Bench-type shears

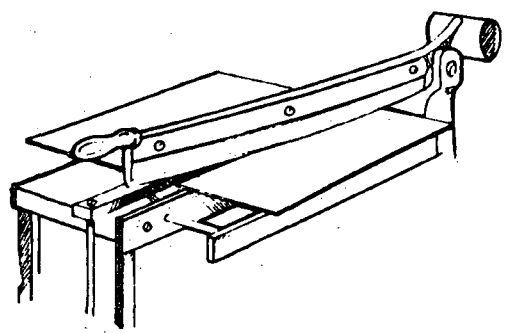

Fig. 7 Guillotine shears

Conditions of use

a) The blades must be sharpened correctly.

b) The pivot should be properly adjusted so that there is minimum play.

Care

a) Avoid hitting or dropping them.

b) Always protect the edges of the blades.

c) Do not use them to cut hard steel plates or tempered steel wire.

d) After they are used, clean and grease them to prevent rusting.

This is a machine tool which is used for cutting round holes by means of a revolving tool (Figure 1). The spindle in which the tool is mounted, is moved by an electric motor or by a speed control mechanism. This mechanism could be a step pulley or a set of gears. The tool can be fed by hand or automatically. Drilling machines are used for boring, countersinking, reaming and tapping.

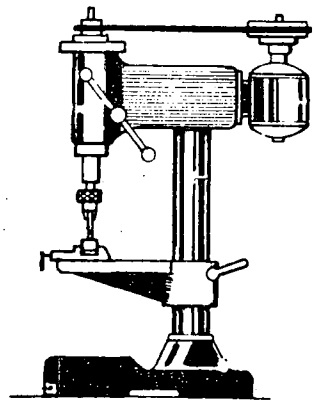

Fig. 1

TYPES

There are several types of drills. Figures 2, 3, 4 and 5 shows the more common ones.

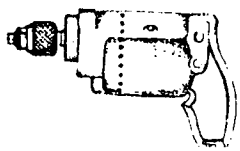

Fig. 2 Electric hand drill

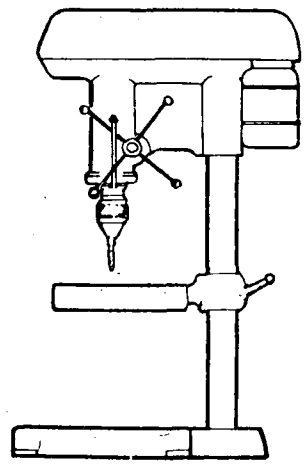

Fig. 3 Bench model drilling machine

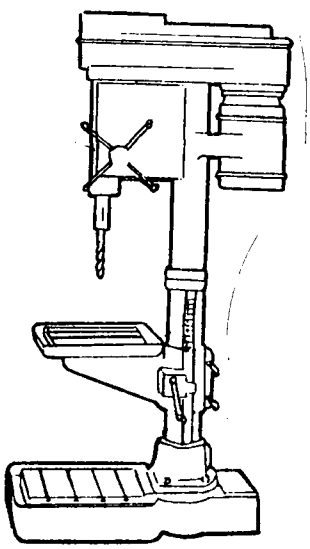

Fig. 4 Floor model drilling machine

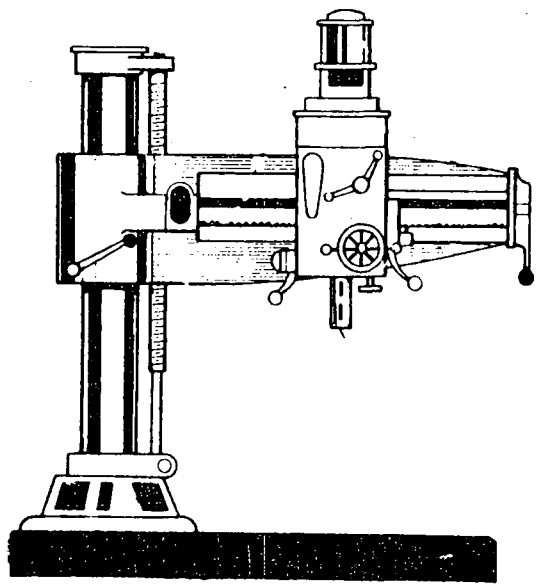

Fig. 5 Radial drill press

CHARACTERISTICS

type of machine;
power of the motor;
speed range;
maximum diameter of the drill;
maximum travel of the spindle;
maximum distance between the column and the spindle.

ACCESSORIES

These are the auxiliary elements with which the operations of the machine can be carried out.

These accessories are:

drill chuck, with its key;
set of drill sleeves;
clamps;
adapted cooling system;
drift for removing the drill chuck and sleeves.

TECHNICAL VOCABULARY

Bench drill = Sensitive drill

CBC

TECHNOLOGICAL INFORMATION

COUNTERSINKS AND COUNTERBORES

REF. TIS.022 | 1/2

Caribbean

These are cutting tools with a straight, tapered or round shape. They are made of carbon steel or hardened and tempered high-speed steel. They have cutting edges with which they countersink or counterbore holes.
They are used with the drill press. They can be fixed in the drill chuck or directly into the spindle.

Characteristics

These cutting tools are characterized by their shape, size and type of shank. These shanks can be tapered or straight.
Figure 1 shows a straight shank counterbore with a pilot.
Figure 2 shows a straight shank countersink.
Figure 3 shows a taper shank countersink.

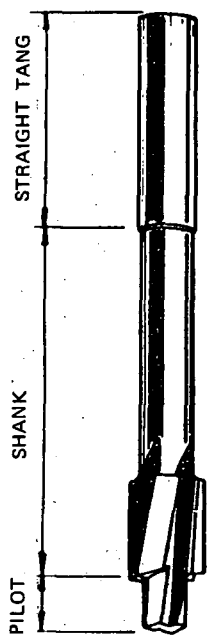

Fig. 1

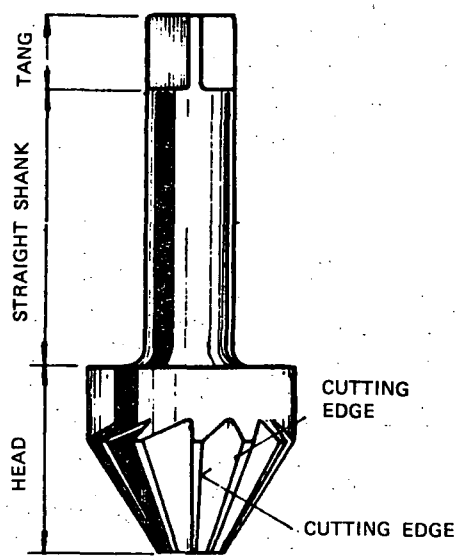

Fig. 2

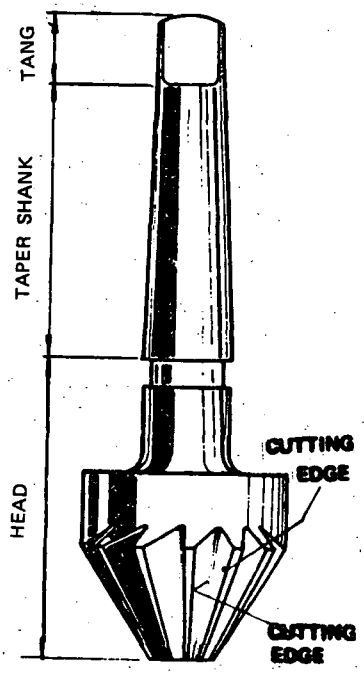

Fig. 3

Figure 4 shows another type of tapered countersink.
Figure 5 shows a round head countersink with a hexagonal tang.

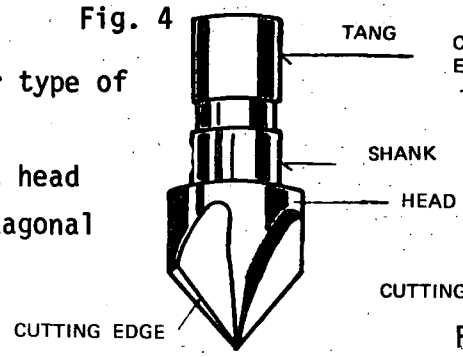

Fig. 4

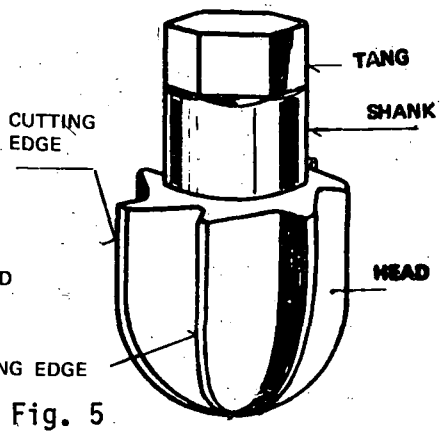

Fig. 5

Tapered countersinks usually have an angle of 60° or 90°.
Figures 6, 7 and 8 show the types of countersinking done with the straight, tapered and round countersinks, respectively.

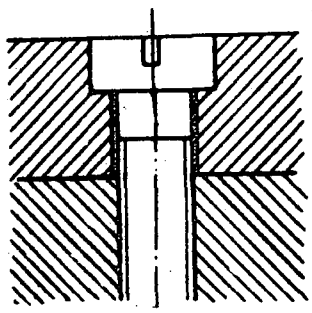

Fig. 6

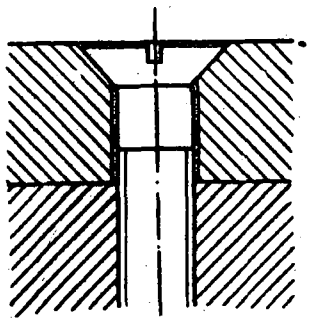

Fig. 7

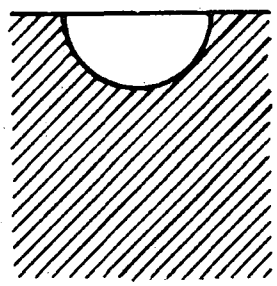

Fig. 8

The counterbore with Pilot and Replaceable Heads - Figure 9 shows a counterbore with a pilot and a replaceable head. It is used for counterboring holes.

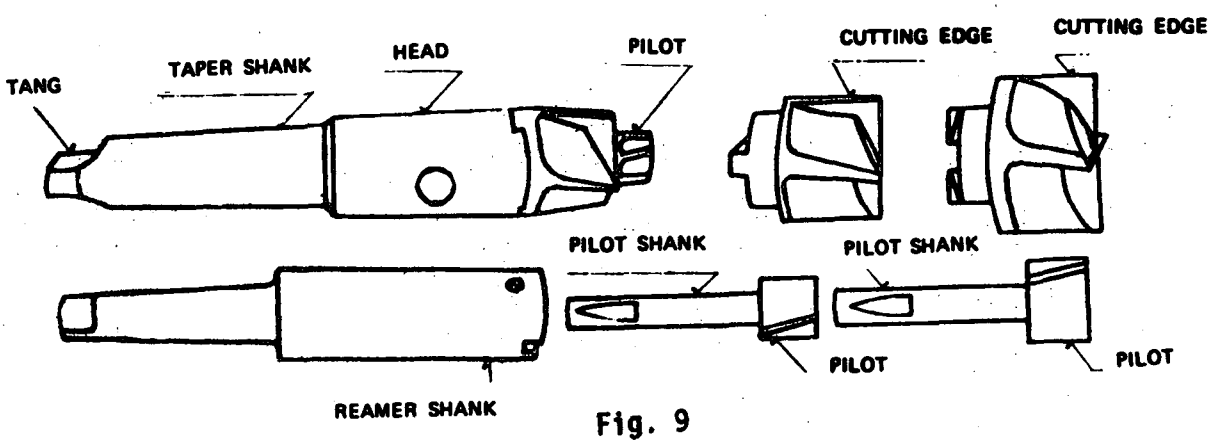

Fig. 9

Care. Clean after use, keep them in a convenient place. Avoid dropping them. Keep them from receiving blows and coming into contact with other tools.

There are different types of vernier calipers. Each type has its particular use. Figures 1 to 7 show some examples.

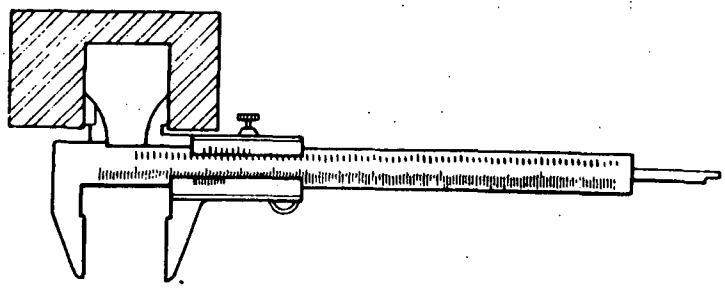

Fig. 1 Universal Vernier Caliper (inside measurement)

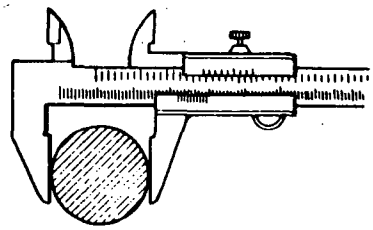

Fig. 2 Universal Vernier Caliper (outside measurement).

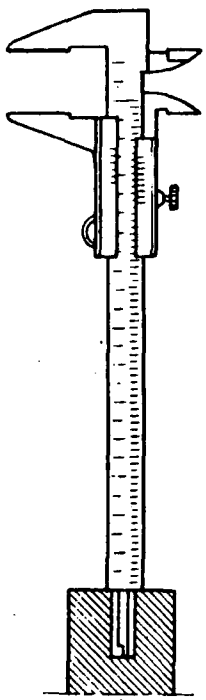

Fig. 3 Universal Vernier Caliper (with depth gauge)

The mechanical shifting device (Figure 4) makes correct measuring easy because it allows a gradual and smooth movement of the jaw.

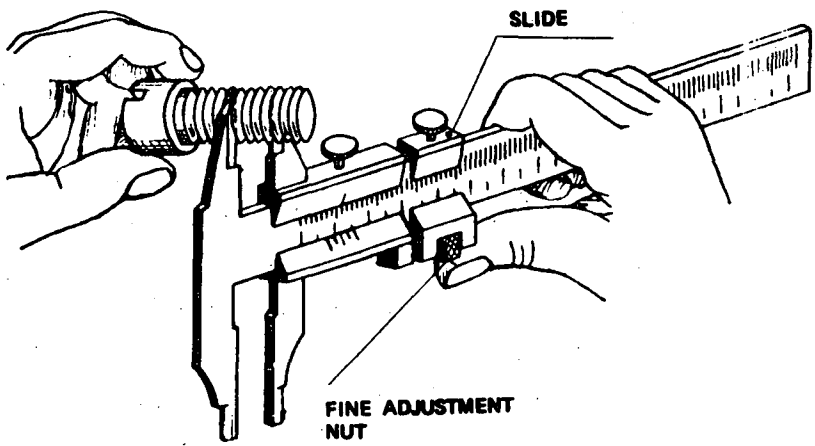

Fig. 4 Vernier Caliper with mechanical shifting device

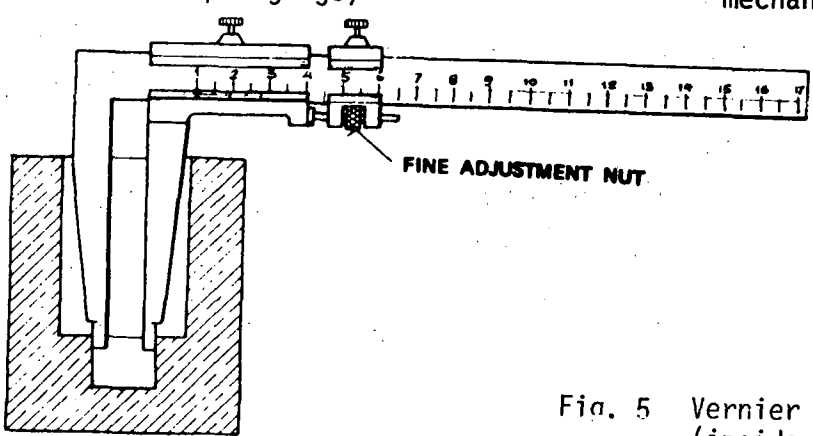

Fig. 5 Vernier caliper with long jaws (inside measurement)

Fig. 6 Vernier depth gauge with hook for inside measuring (measuring thickness of a wall).

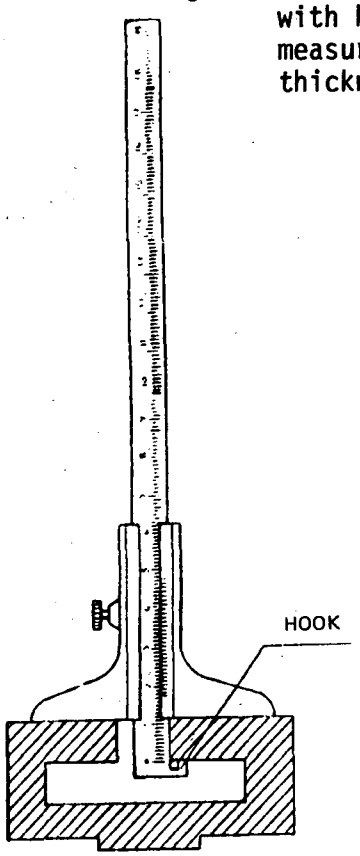

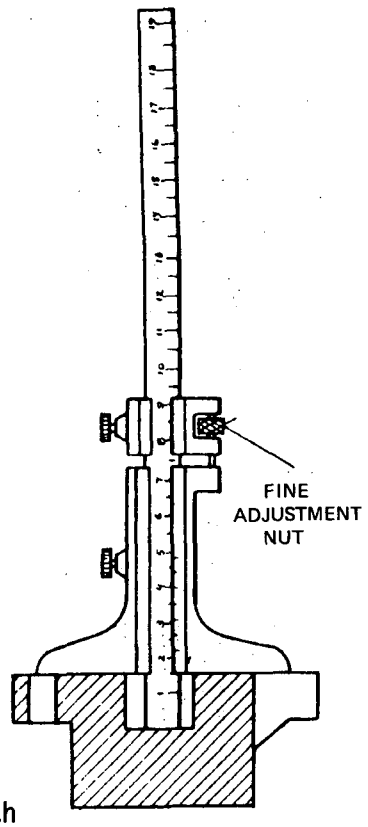

Fig. 7 Vernier depth gauge (measuring a groove).

CONDITIONS OF USE OF THE VERNIER CALIPER

1. The caliper should be checked with a master.
2. The contact surfaces of the workpiece and the caliper should be perfectly clean.
3. The slide should be adjusted and its movement smooth.
4. Handling should be careful. Excessive pressure should not be applied on the slide, it may alter the adjustment of the instrument.

CARE

1. Clean the caliper carefully and place it in its case;
2. It should be kept in a place exclusively used for measuring instruments.
3. Check its adjustment and precision periodically. Cover it with a fine coat of petroleoum jelly.

CHARACTERISTICS

1. *Length* - The length of the instruments is given by their measuring capacity. This varies between 150 to 2000 millimetres.
2. *Graduated beam* - These are beams which are graduated in millimetres and inches. Those graduated in inches show decimals or ordinary fractions.
3. *Vernier* - These are made with 10, 20 and 50 divisions for obtaining readings with approximations of 0.1mm, 0.05mm and 0.02mm respectively.
4. *Slide* - There are calipers with a mechanical adjustment which allows moving the slide very smoothly.
5. *Clear etchings* - This makes reading easy.

CONSTRUCTION

Calipers are normally made of carbon or stainless steel. Sometimes they are tempered and have a polished or matt surface finish.

S U M M A R Y

VERNIER CALIPERS	*Universal Type:* outside, inside and depth measuring	
	Long jaws: inside and outside measuring	
	Depth gauge	*Simple* for measuring recesses and holes
	Caliper	*With hook:* for measuring recesses and thickness of walls

CARE

The caliper should always be checked. Its parts should be clean and adjusted.

It should be used carefully.

It should be kept in an appropriate place.

CHARACTERISTICS

Length: 150 to 2000 mm.
Graduation of the beam: in mm and inches.
Vernier: with 10, 20 and 50 divisions (appreciations of 0.1 mm, 0.05 mm and 0.02 mm).
Slide: smooth movement,
Clear etchings.

CBC

TECHNOLOGICAL INFORMATION
THE TRY SQUARE

REF. TIS.026 | 1/1

Caribbean

This is a precision instrument in the form of a right angle, made of carbon steel, ground or scraped and sometimes tempered. It is used for checking surfaces at angles of 90° (Fig. 1).
There are squares of different shapes and sizes.

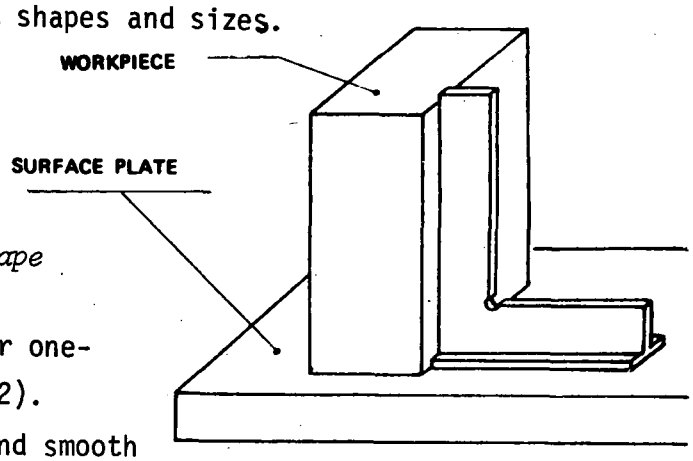

Fig. 1

Depending on the shape
Square with stock (Fig. 1). Simple or one-piece square (Fig. 2). Square with stock and smooth blade (Fig. 3) used also for layout work.

Square with stock and bevelled blade (Fig. 4), used for greater precision because of its small surface contact.

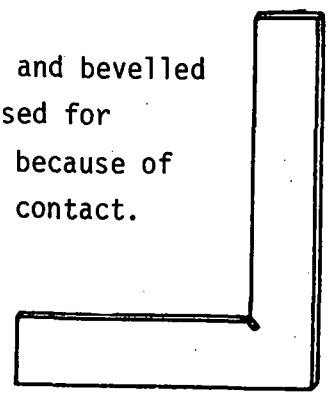

Fig. 2

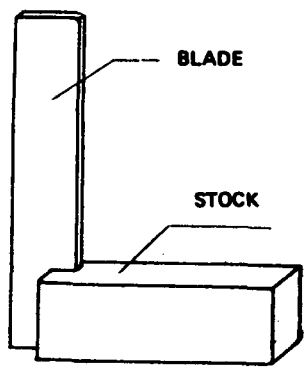

Fig. 3

Sizes

The sizes are given following the lengths of the blade and the stock. These are in a relation of approximately 1 to 3/4.
Example: A square measuring 150 x 110 mm.

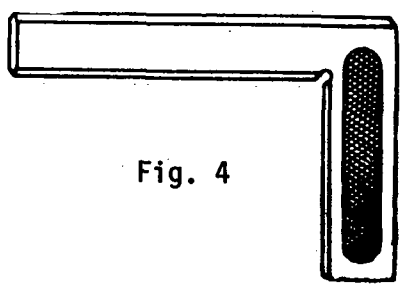

Fig. 4

Conditions of use - It should not: receive blows, have burrs, it should always be clean and have the exact angle.

Care - When the work is completed, it should be cleaned, greased and stored in a place out of contact with other tools.

CBC

TECHNOLOGICAL INFORMATION
THE TRY SQUARE

This is a precision instrument in the form of a right angle, made of carbon steel, ground or scraped and sometimes tempered. It is used for checking surfaces at angles of 90° (Fig. 1).
There are squares of different shapes and sizes.

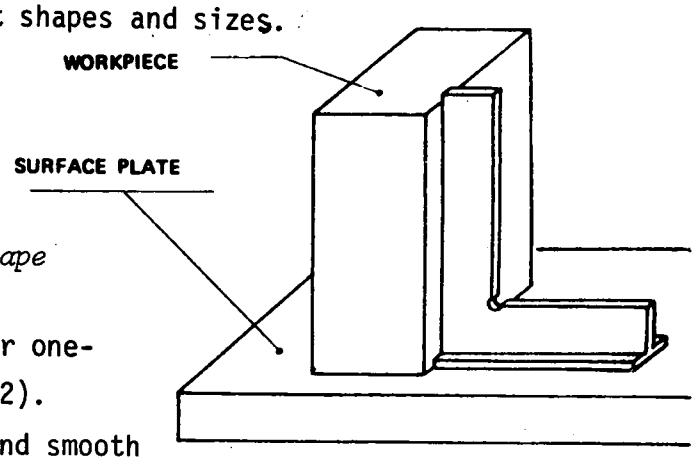

Fig. 1

Depending on the shape
Square with stock (Fig. 1). Simple or one-piece square (Fig. 2). Square with stock and smooth blade (Fig. 3) used also for layout work.

Square with stock and bevelled blade (Fig. 4), used for greater precision because of its small surface contact.

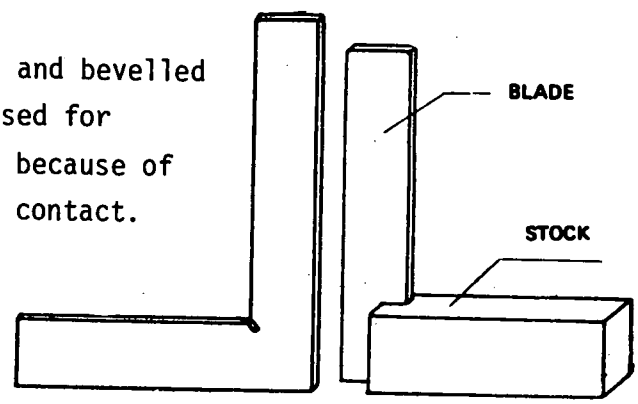

Fig. 2 Fig. 3

Sizes

The sizes are given following the lengths of the blade and the stock. These are in a relation of approximately 1 to 3/4.
Example: A square measuring 150 x 110 mm.

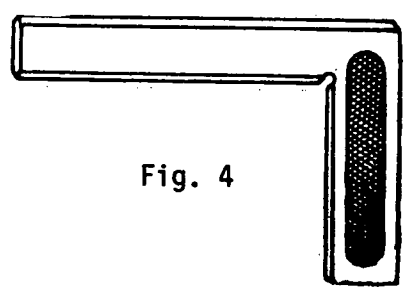

Fig. 4

Conditions of use - It should not: receive blows, have burrs, it should always be clean and have the exact angle.

Care - When the work is completed, it should be cleaned, greased and stored in a place out of contact with other tools.

TECHNOLOGICAL INFORMATION

THE PLANING AND SHAPING MACHINE (PARTS AND CHARACTERISTICS)

This is a machine tool which has a reciprocating movement. It consists of the following parts (Fig. 1).

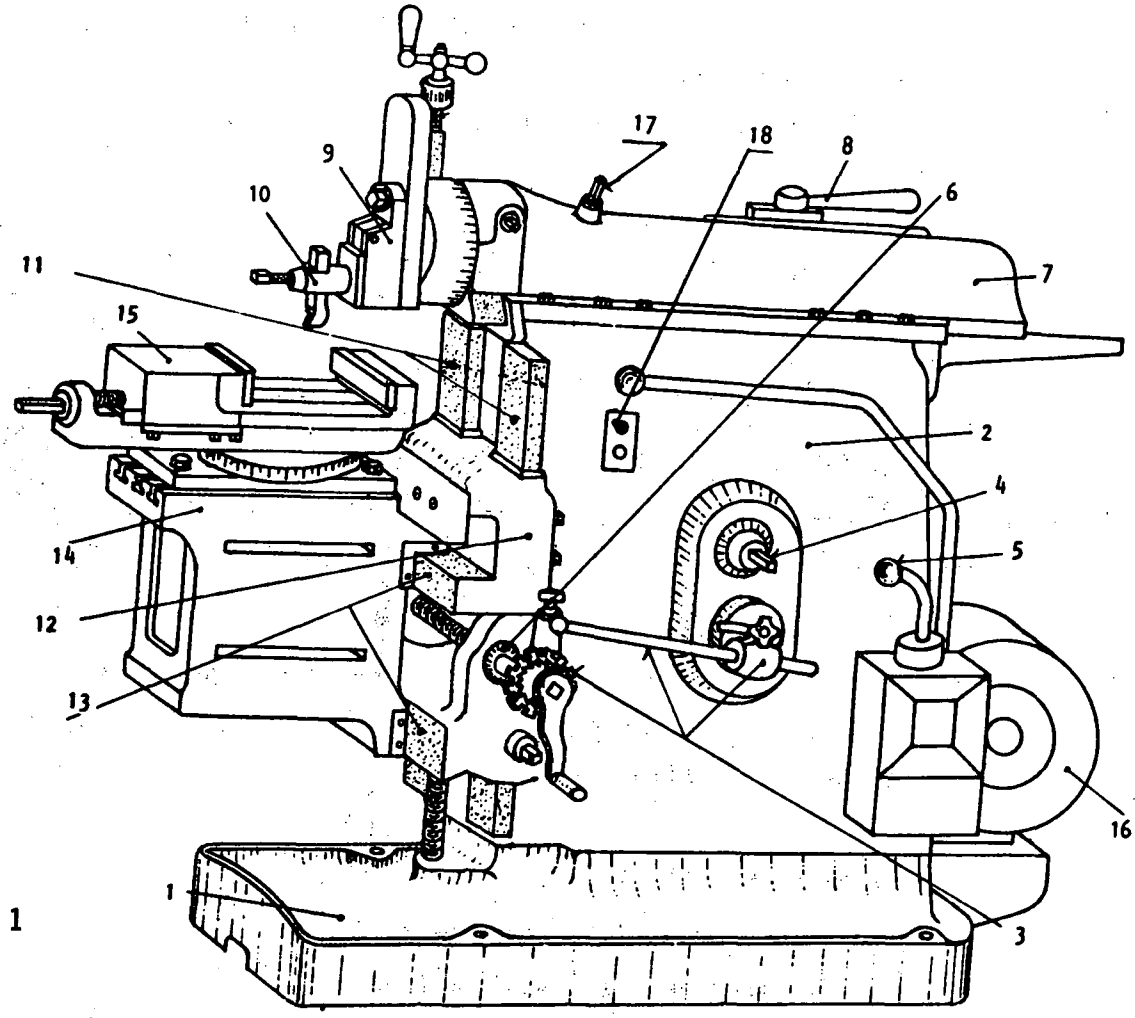

Fig. 1

1. Base
2. Body
3. Automatic crosswise table shift
4. Length of stroke adjustment
5. Speed-shift lever
6. Adjusting ring
7. Ram
8. Lever securing ram to rocker ram
9. Clapper box
10. Tool-post
11. Vertical slide guides
12. Vertical carriage
13. Cross slide guides
14. Table
15. Vice
16. Motor
17. Positioning stroke lock
18. Motor switch

The ram is driven by the motor by means of a crank-type attachment.

It is used for planing the surfaces of machine parts. These surfaces may be:
flat, angular, concave, convex (Figs. 2, 3 and 4).

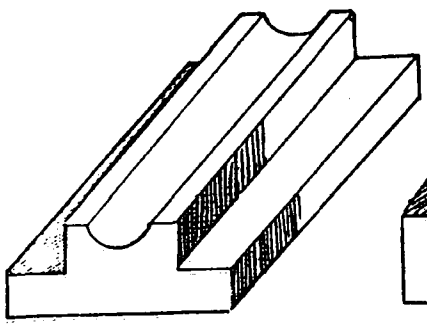

Fig. 2

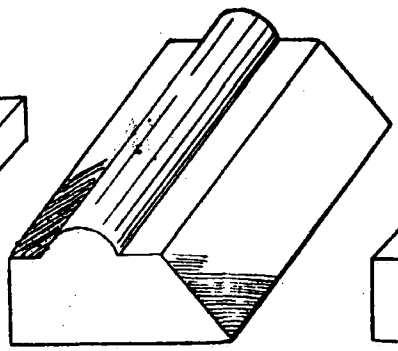

Fig. 3

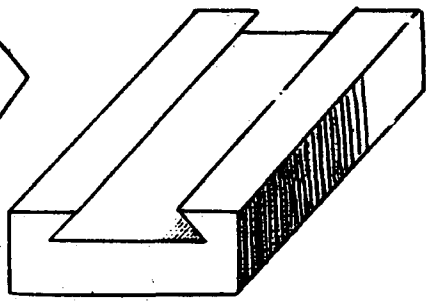

Fig. 4

Simple shaping machines can cut flat and angular shapes. For concave and convex shapes it is necessary to use attachments or accessories called copiers.

Main Characteristics

1. Maximum run of the tool head.
2. Greatest vertical displacement.
3. Greatest crosswise displacement.
4. Maximum displacement of the tool-holder.
5. Size of the table.
6. Capacity of the motor.
7. Weight of the machine.

Types

Shaping machines are classified as:

1. Planing and Shaping machines

2. Bench-type planing machines.

The difference between the shaping machine and the bench-type planing machine is that, in the case of the first, the tool makes the cutting run and the workpiece is moved crosswise in stages; while in the second, the workpiece makes the cutting run, and the tool moves across the workpiece.

Depending on the size, the longest runs of shaping machines will range from 120 mm to 1000 mm. Bench-type planes can be used in many different machine operations. Depending on their function, there are two types of planing and shaping machines:

1. Mechanically driven Planing and Shaping Machines
2. Hydraulically driven Planing and Shaping Machines

The movement of the shaping machine is transmitted from an electric motor, through the gearbox. This rotary movement is transformed into a back-and-forth movement rod system, or by a rocker arm on the fly-wheel or main gear (Figs. 5, 6 and 7).

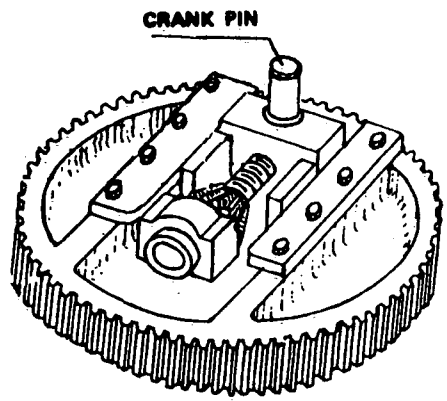

Fig. 6

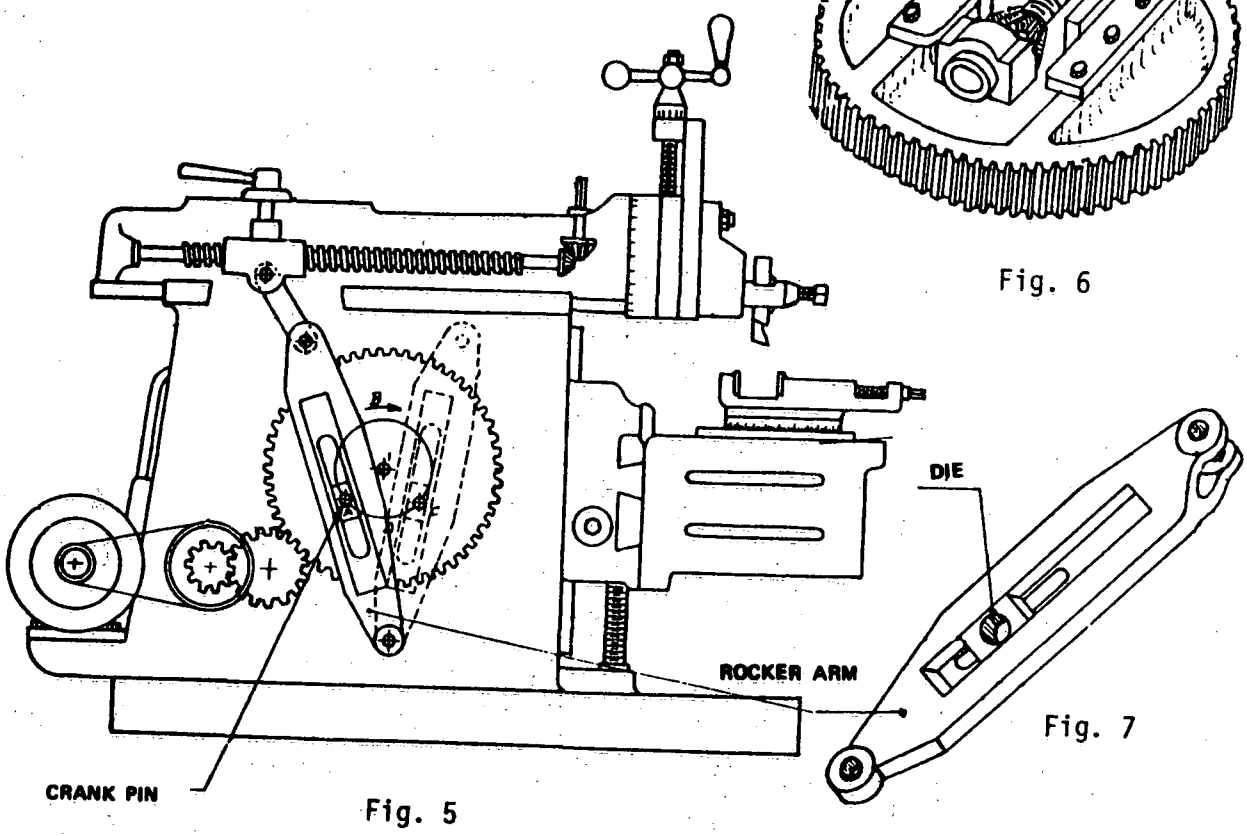

Fig. 7

Fig. 5

The crosswise movement of the table is obtained by an eccentric (B) which actuates a lever (A) at each return of the ram so that a catch (U) engages in the gear wheel (R) mounted on the spindle (T) of the table. The catch allows the forward movement of the table to be adjusted with each run of the ram (Figs. 8 and 9).

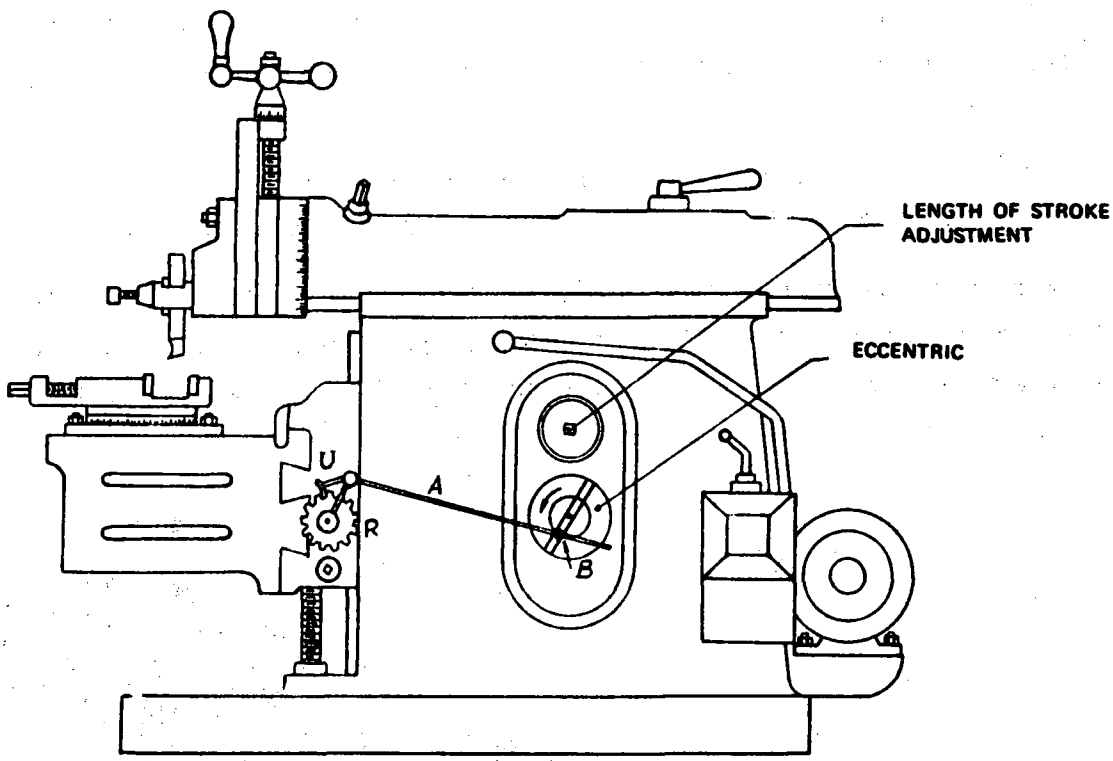

Fig. 8

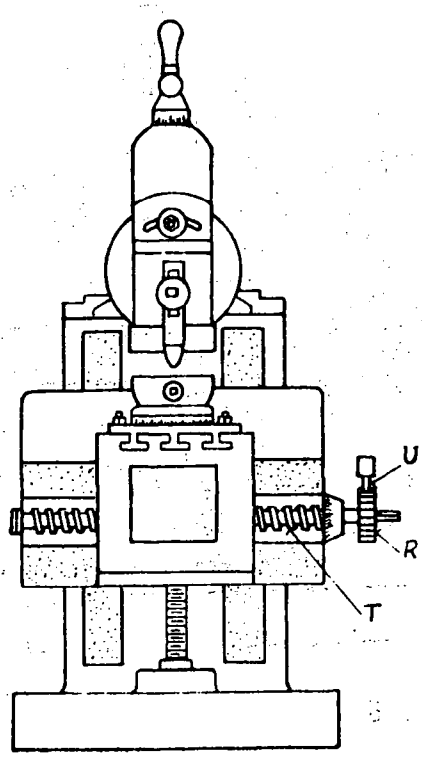

Fig. 9

Automatic vertical feed of the tool-holder.

Many shaping machines are equipped with this device. On the head there is a vertical feed screw connected to shafts, bevel gears and a nut. These turn the feed screw on the tool-head (Fig. 10).

A stop is fitted on the guide of the shaping machine. As the ram runs backwards, the lever makes contact with the stop and turns slightly on its axis, thus starting the feed of the tool-holder. The length of the feed is adjusted by the tool-feed selector.

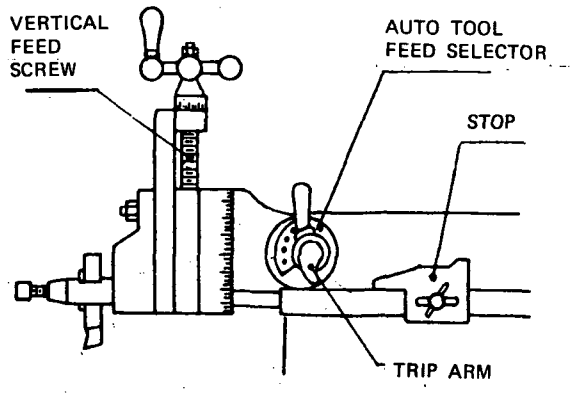

Fig. 10

CARE

a) Cranks and shafts should be properly adjusted.

b) Use cutting and feed speeds that are suitable for the material and tools.

c) Always keep the machine well oiled.

d) Change the oil in the gearbox according to instructions and keep it at the correct level.

e) Clean the machine when the work is done.

These are forged steel or stamped hand tools. They consist of two handles and a pivot (or joint). The gripping or cutting jaws of the pliers are located at one of the ends of the handles. The jaws are tempered and annealed.
They are used for tightening, cutting, bending, placing and removing certain parts during the mounting process.
The characteristics, sizes, types and shapes, vary according to the work to be done.

TYPES

The main types are:
electrician's pliers
cutting pliers
nose pliers
vice-grip pliers (or plier wrench)
slip-joint pliers

Electrician's pliers

They are used for several operations, such as: holding, cutting and bending (Fig. 1).

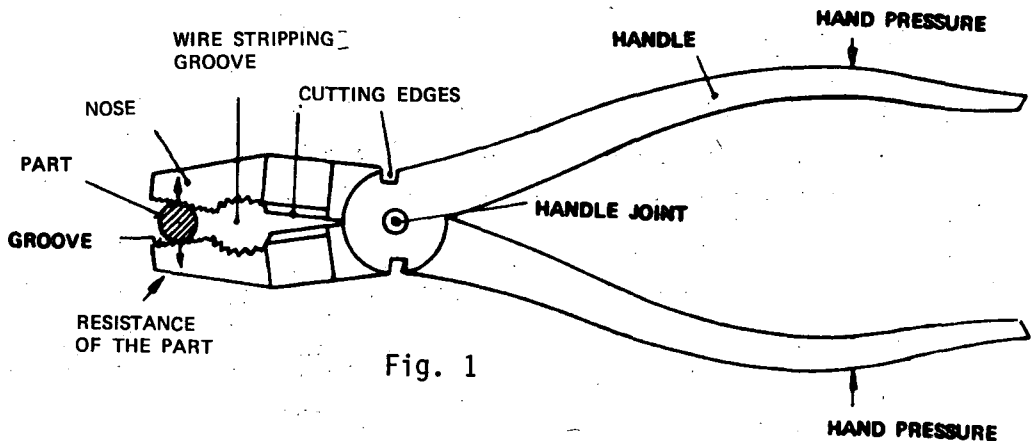

Fig. 1

Cutting pliers

They are used for cutting metal plates and steel wires. Cutting pliers may have replaceable cutting edges (Figs. 2 to 5).

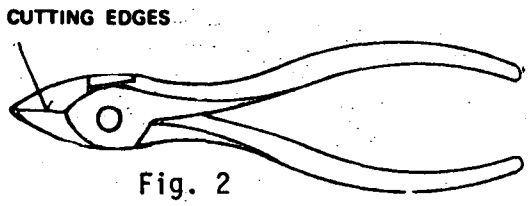

Fig. 2
Diagonal cut

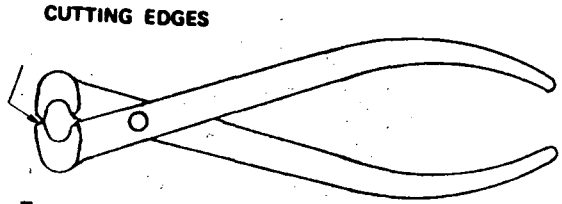

Front cut Fig. 3

Multiple action cutting pliers with replaceable cutting edges (Figs. 4 and 5).

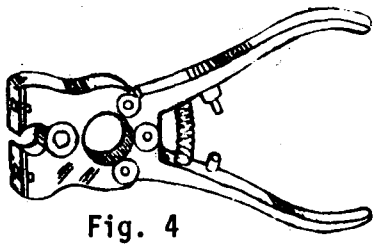

Fig. 4

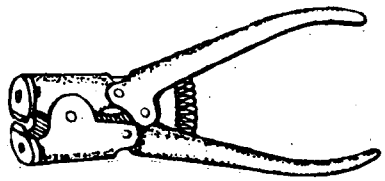

Fig. 5

Nose pliers

Figures 6 and 9 show several types of nose pliers.

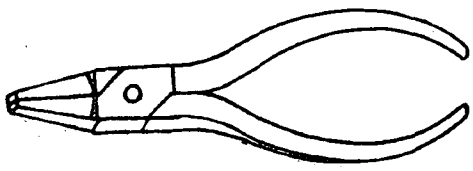

Fig. 6

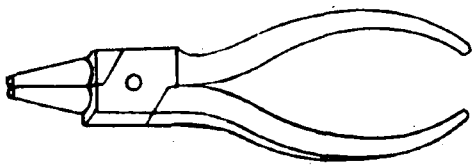

Fig. 7

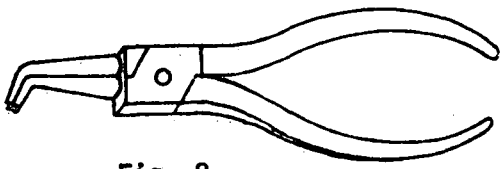

Fig. 8

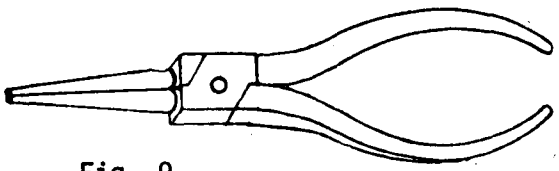

Fig. 9

Vice-grip pliers

They work by pressure, gripping the workpiece firmly. The pressure is adjusted by means of a screw at one end (Fig. 10).

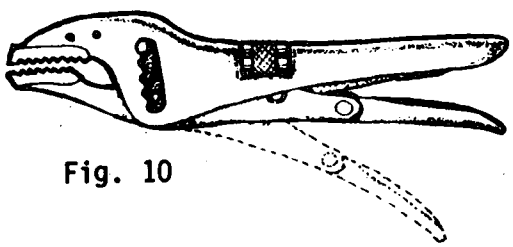

Fig. 10

Slip-joint pliers

The slip-joint can be shifted to allow a wider opening. They are generally used for round workpieces (Figs. 11 and 12).

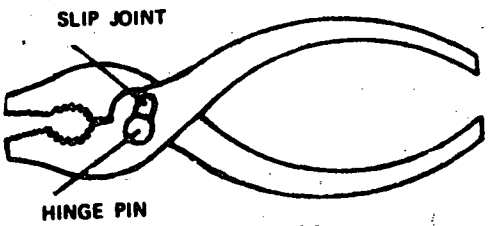

Fig. 11

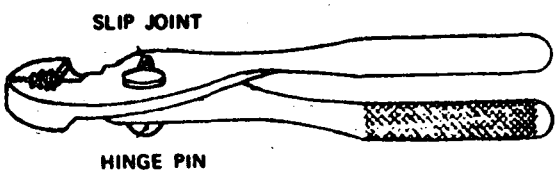

Fig. 12

This is a machine-tool the saw band of which has a continuous movement. This movement is caused by the rotation of flywheels and pulleys driven by an electric motor.

There are two types, depending on the position of the blade. These types are, vertical and horizontal. Figure 1 shows the machine called *Vertical Band Saw.*

1 Switch.
2 Column.
3 Switch for butt welder and clamp.
4 Jaws.
5 Pressure control for welding the saw blade.
6 Cutter.
7 Electric welder for band saw.
8 Driven wheel case.
9 Blade tension flywheel.
10 Saw guide.
11 Tilting table.
12 Motor and transmission box.
13 Tool box.
14 Drive wheel case.

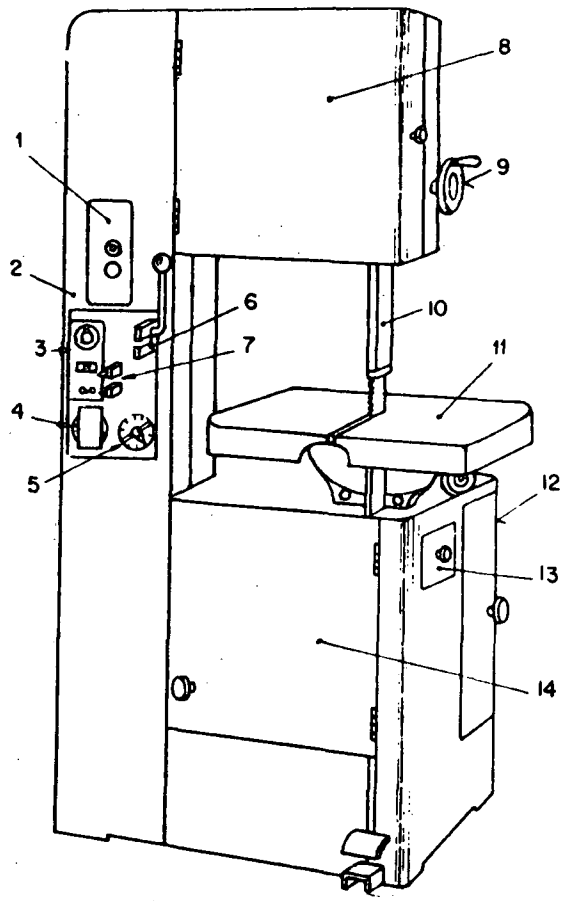

Fig. 1

Figure 2 shows the *Horizontal Band saw.*

1 Band saw carrier.
2 Ballast.
3 Driven pulley.
4 Band saw.
5 Electric motor.
6 Leg.
7 Machine bed.
8 Vice.
9 Workpiece.
10 Hydraulic feed control
11 Tension spring.

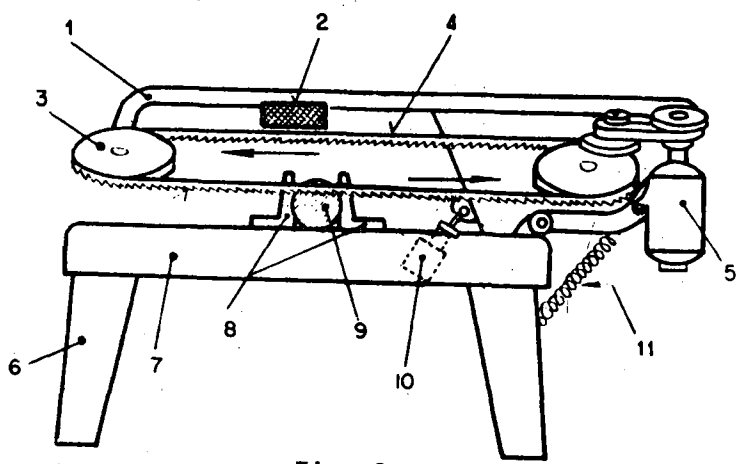

Fig. 2

THE VERTICAL BAND SAW

This machine is most suitable for contour work because better results can be obtained from it. Works like internal and external contour sawing of sheet metals, stock or workpieces, can be done with it. For this reason it is commonly used in machine shops.

Movement of the blade

It is obtained by means of two wheels which have a rubber band around their external circumference. The purpose of this rubber band is to keep the saw band from slipping. The tension adjustment is obtained by shifting the *driven wheel*. Shifting is done by means of an appropriate mechanism (Fig. 3).

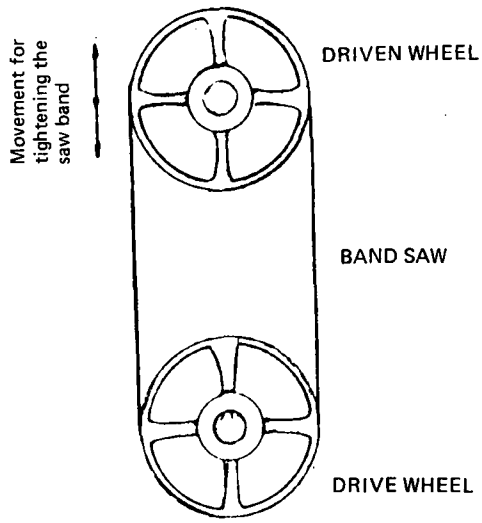

Fig. 3

Tilting of the table

For carrying out slanted cuts, the table of the machine has an articulated mechanism on its lower surface. It allows tilting the table in both directions: to the right and left of the operator.

Saw band guides

These are the parts which supply stability to the saw band when cutting. There are two guides. An upper and a lower one (Fig. 4). The upper guide, which is movable allows adjusting the free height of the band. This gives it stability.

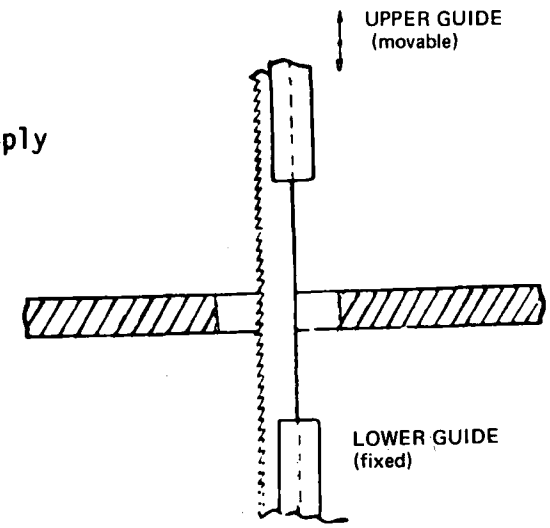

Fig. 4

Change of cutting speed

Because different materials have to be cut, the cutting speed of the machine can be changed, that is, the saw band speed. The speed is adjusted to each case. The most common mechanism for obtaining this change are two: one with step pulleys with "V" belts and the other with a system of pulleys the diameter of which can be varied.

The system of pulleys with varying diameter has the advantage of allowing a continuous change within a maximum and a minimum limits. Step pulleys, have four or five values which correspond to the diameter of each pulley.

Feed

The feed is usually controlled by hand. However, there are machines with automatic feed control.

Saw blade welding device

All machines of this kind, have an electrical device capable of welding the saw blades they use. Usually, this device also has a grinder built into it, for removing the "flash" formed at the point of weld.

Structure of the machine

The structure is made of welded steel plate. The machine table and the wheels are of cast iron. The other parts are of carbon steel.

HORIZONTAL BAND SAW

It serves the same purpose as the reciprocating power hacksaw. However, the output is higher because of the continuous movement of the saw band.

Figure 5 shows, in great detail, the main driving mechanisms of the saw band.

1 Saw band frame box.
2 Driven carrier wheel.
3 Sliding balance-weight.
4 Internal-toothed gear.
5 Drive carrier wheel.
6 Speed control mechanism box.

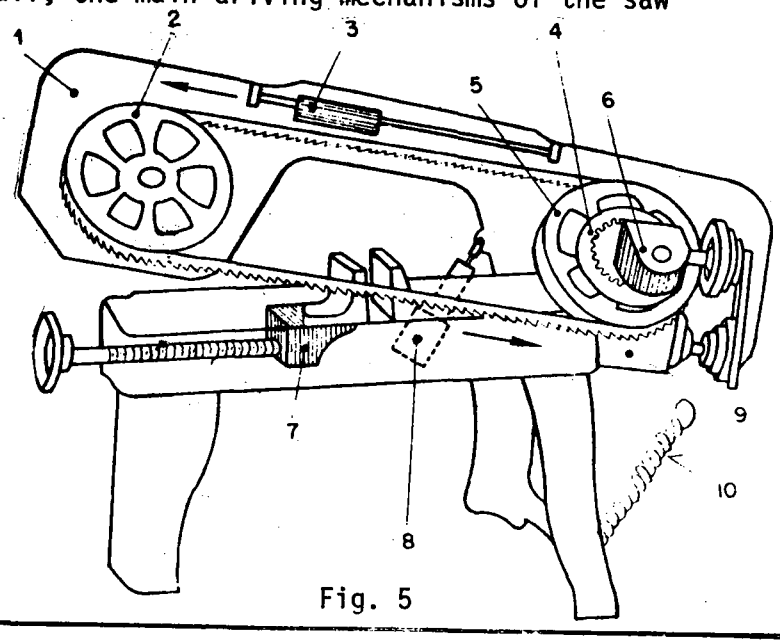

Fig. 5

7 Bolt and nut for vice adjustment.
8 Hydraulic feed control.
9 Electric motor.
10 Framework tension spring.

Movement of saw band

This movement is obtained as in the vertical band saw, by means of two band carrier wheels. The drive wheel is moved by a speed control mechanism which works through an internally toothed gear (Fig. 6). This gear is moved by an electric motor through "V" step pulleys.

Saw band guides

As in the case of the vertical band saw, the guides give stability to the saw band. Figure 7 shows a guide consisting of cylindrical rollers.

Feed of the saw band

The feed is a result of the weight of the saw band container. It is adjusted by means of the oil valve and of the sliding ballast (Fig. 8).

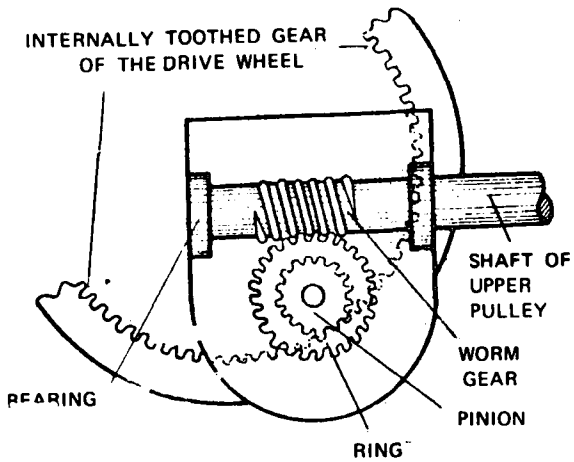

Fig. 6

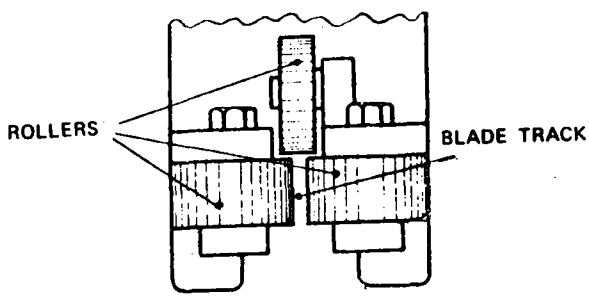

Fig. 7

CONDITIONS OF USE

1. Keep the machine lubricated.
2. For the saw bands to move smoothly through the guides, welded points should be neatly finished.
3. Adjust the tension of the band to keep it from sliding on the contact surface of the wheels. Do not tighten excessively.

MAINTENANCE

1. After work, loosen the band.
2. Clean the machine after work.
3. Keep the accessories in good working condition. Keep them in suitable place.

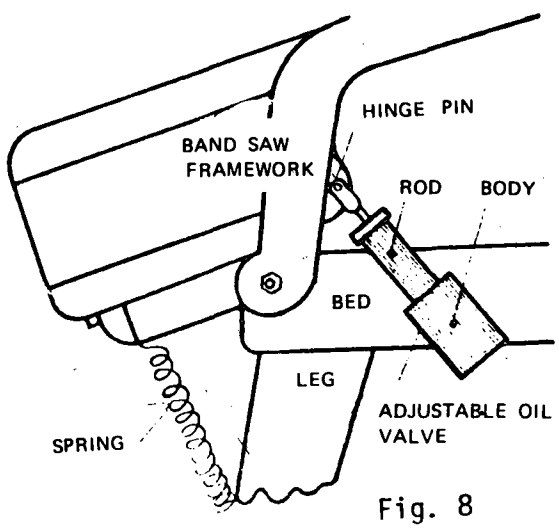

Fig. 8

This is a machine tool which uses a blade similar to the one used in a hand hacksaw, only larger and heavier and, through a reciprocating (back and forth) movement, cuts metals.

There are two types and each type, depending on its drive, can be: mechanical and hydraulic.

Figure 1 shows the mechanically driven reciprocating power hacksaw.

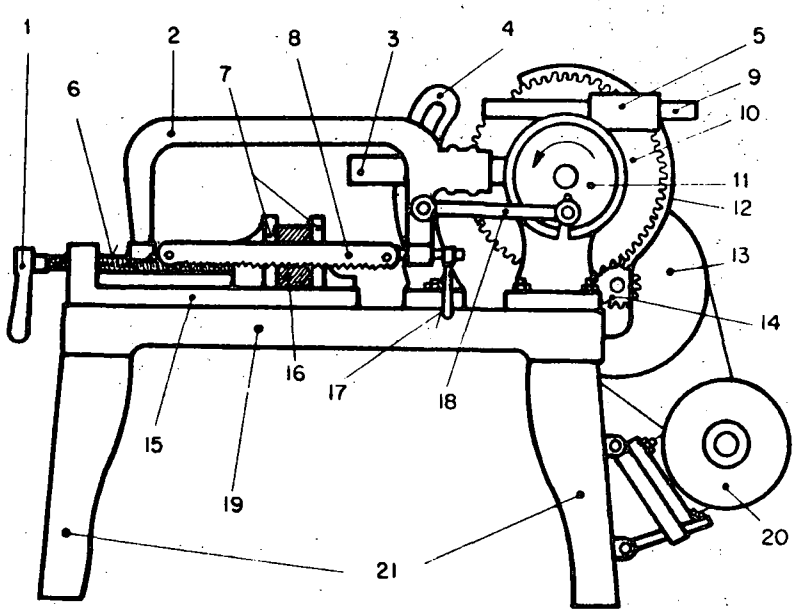

Fig. 1

1 Vice handle
2 Hack saw frame
3 Frame guide
4 Frame-supporting
5 Counterweight
6 Vice screw
7 Vice
8 Blade
9 Counterweight support
10 Transmission gear
11 Flywheel
12 Gear cover
13 Pulley
14 Transmission pinion
15 Vice base
16 Workpiece
17 Automatic shut-off
18 Connecting rod
19 Bed
20 Electric motor
21 Legs

Figure 2 shows a hydraulic type reciprocating hacksaw.

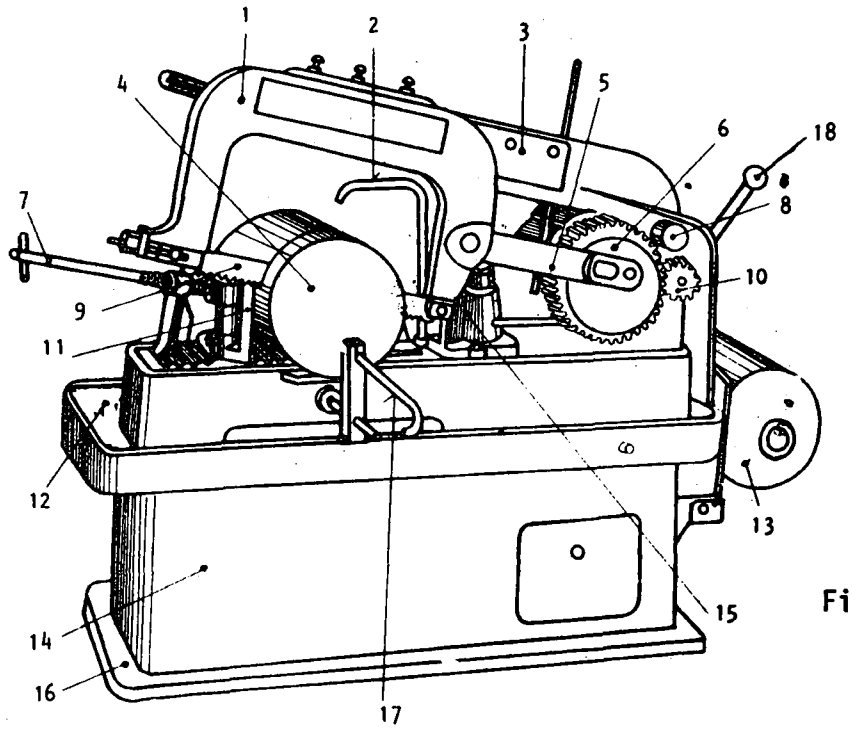

Fig. 2

1 Frame
2 Coolant pipe
3 Runner
4 Workpiece
5 Connecting rod
6 Flywheel
7 Vice handle
8 Frame articulation
9 Blade
10 Transmission pinion
11 Vice
12 Tray
13 Electric motor
14 Housing
15 Oil pump
16 Base
17 Workpiece stop
18 Stroke selector lever

The use of this tool is limited to preparing stock for future works. These machines are not used for obtaining finished workpieces.

CHARACTERISTICS

1) *Construction* - The greater part of the components of these machines are made of cast iron with the exception of shafts and gears. As these parts bear great stresses, they are made of carbon steel.

2) *Power of the motor* - It should be adequate with the maximum demands of the machine and be able to move the machine when cutting demands greater power.

3) *Feed mechanism*

a) *Mechanical* - The pressure of the frame serves this purpose. Pressure can be adjusted by shifting the counterweight (Fig. 3). Pressure is reduced when the counterweight is shifted away from the frame.

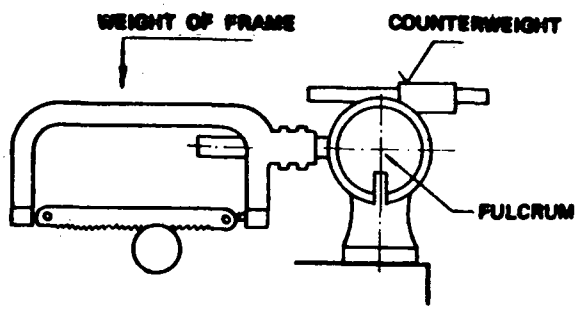

Fig. 3

b) *Hydraulic* - pressure in this case, is obtained from a hydraulic pump and a valve which allows to adjust the feed. It has the following characteristics:

- progressive and uniform feeding of the material; it allows the material to be lifted on the return stroke of the blade.
- when cutting is finished, it stops the motor automatically and lifts the frame.

4) *Cutting capacity* - this is limited by the depth of the frame and the length of the material.

5) *Cutting speed* - this is given by the number of strokes per minute. The possibility of being able to vary the number of strokes, provides a better use of the hacksaw.

6) *Transmission of movement* - as electric motors work at high speeds, it is necessary to use pulleys and groups of gears to obtain the correct speed.

7) *Conservation of movement* - the reciprocating movement with which the hacksaw carries out its work, is obtained from a mechanism called "rod and flywheel". This combination changes the rotary motion of the motor into an alternate rectilinear motion at the frame of the hacksaw.

These are tools with cutting teeth (Figs. 1 and 2). The teeth are slightly offset (SET). Blades are generally made of carbon steel or high-speed steel and are used for making slots thus making it possible to cut metals.

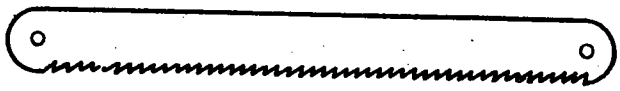

Fig. 1

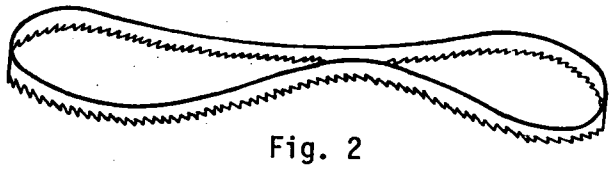

Fig. 2

The hack saw blade shown in Figure 1 is used in reciprocating machines; it is made of tempered high-speed steel.

As in the horizontal reciprocating hacksaw the cut is made in the return stroke, the blade is mounted with the teeth looking backwards.

The blade shown in Figure 2 is characterized by its length and necessary flexibility. It is normally made of carbon steel and only the teeth are tempered. It is used on vertical and horizontal band saws. The movement is continuous and the teeth are directed in the cutting direction of the machine as indicated by the arrows in Figures 3 and 4.

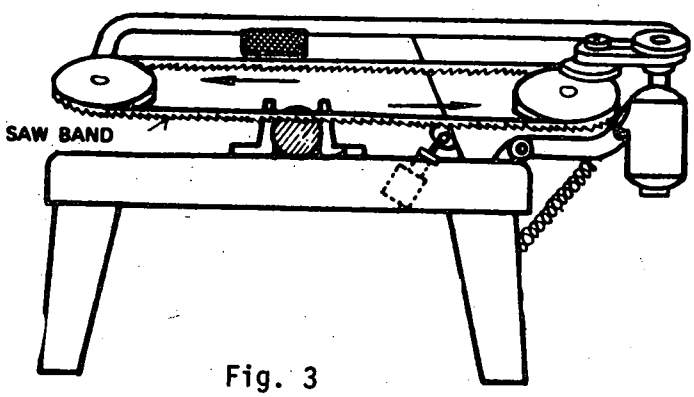

Fig. 3

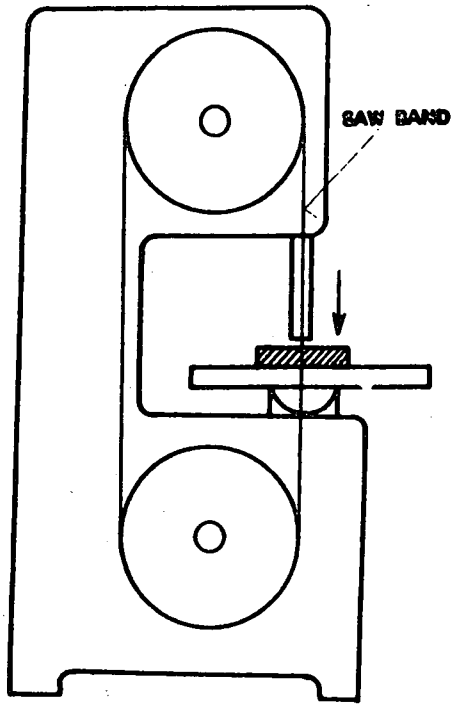

Fig. 4

Set

This is the lateral offset of the teeth. The purpose of this is to make a groove wider than the thickness of the blade. This avoids lateral friction (Fig. 5).

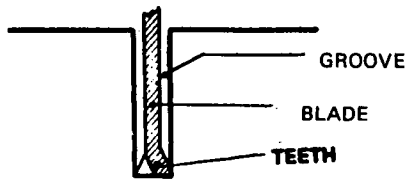

Fig. 5

Figures 6, 7 and 8 show various types of set.

Fig. 7 SKIP TOOTH (Soft metals)

Fig. 6 DOUBLE SKIP TOOTH (Thick hard steel)

Fig. 8

WAVY (Thin metals)

A good output of the blade depends on its correct selection and the work to be done.

The following tables and charts give a good guide for the selection and conditions of use of the blades.

OBSERVATION

The tables and charts were taken from *"STARRET TOOLS"* catalogue B 100.

Selection of Blade and Cutting Speed

MATERIAL	THICKNESS OF MATERIAL				STROKES PER MINUTE
	Up to 20mm (3/4")	From 20mm to 40mm (From 3/4" to 1½")	From 40mm to 90mm (From 1½" to 3½")	Over 90mm (Over 3½")	
	Number of teeth per 1"				
Nickel Steel	14	10	6	4	70 to 85
Common steel Stainless steel High speed steel	14	10	6	4	75 to 90
Sections Pipes	14	-	-	-	75 to 90
Cast iron	14	10	6	4	90 to 115
Bronze Copper	14	10	6	4	95 to 135
Aluminium Brass	14	10	6	4	100 to 140

Selection of the blade and cutting speed

MATERIAL	THICKNESS						
	Up to 6mm 1/4"	From 6mm to 13mm ¼" to ½"	From 13mm to 25mm ½" to 1"	Over 25 mm 1"	Up to 13 mm ½"	From 13mm to 38mm ½" to 1½"	Over 38mm 1½"
	Number of teeth per 1"				SPEED (m/min)		
Common steel	24-18	14	10-8	6-4	60	50	40
Chrome-nickel steel Mild steel Cast iron	24-18	14	10	8-6	40	35	30
High speed Steel Stainless steel	24-18	14	10	8	30	25	20
Sections and thick Pipes	24-18	14	10	8-6	60	55	50
Fine pipes	14	14	14	14	75	75	75
Non-Ferous metals Aluminium Antimony Brass and Magnesium	10	8	6	4	500	400	300
Copper and Zinc	14	8	6	4	300	250	200
Copper, Aluminium or brass tubes	18-14	18-14	18-14	18-14	600	500	400

GENERAL RECOMMENDATIONS FOR THE USE OF SAW BLADES

1 Check to see if the blade is away from the material when the machine is switched on.

2 Tighten the blade moderately. Check the tension after a few strokes and adjust it if necessary.

3 Use a feed rate adequate to the thickness of the material to be cut; for fine material, reduce the feed.

4 The workpiece should be securely held in the vice, especially when cutting grouped material.

5 Always use the appropriate cutting speed.

6 Keep the machine and the blade in good working condition.

CBC

TECHNOLOGICAL INFORMATION
THE SCREWDRIVER

The screwdriver is a tool used for turning screws. It has a cylindrical carbon-steel shank, one of its ends is forged like a wedge, the other has a prismatic or grooved cylindrical shape. This end is inserted in a wooden or plastic handle (Figs. 1 and 2).

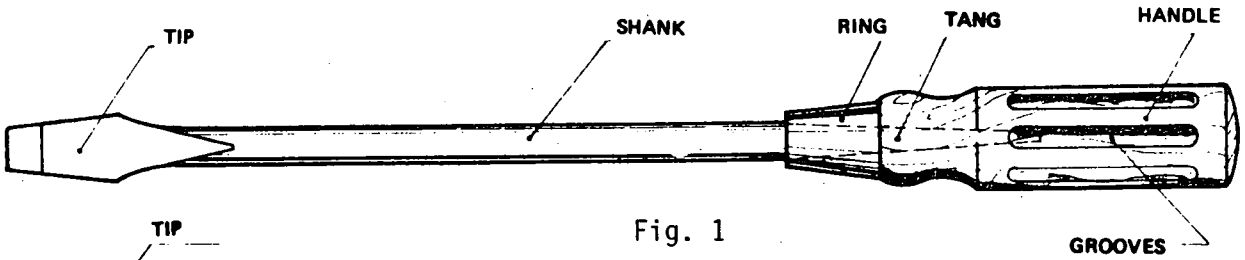

Fig. 1

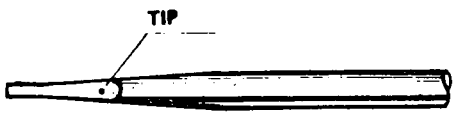

Fig. 2

USE

This type of screwdriver is used for tightening or loosening screws with slotted heads which allow the entry of the tip. Tightening or loosening is done by turning the screwdriver (Figures 3, 4 and 5).

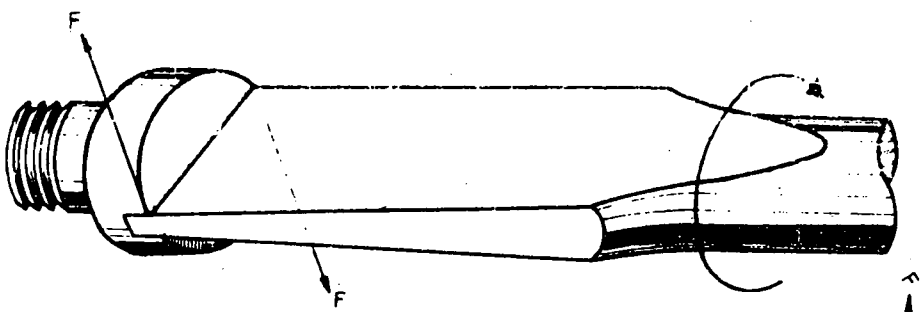

Fig. 3

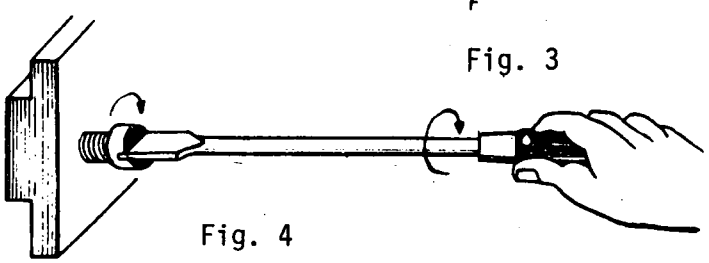

Fig. 4

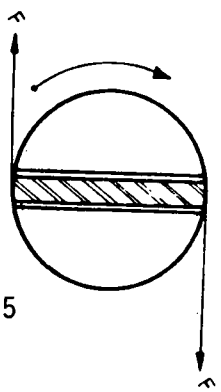

Fig. 5

Characteristics

The tip of the screwdriver should be tempered and annealed. The faces of the tip should be flat and parallel to allow a correct fit in the slot of the screw head (Fig. 5).

The handle should be grooved in a lengthwise manner to allow a firmer grip. The length of the screwdriver vary between 100 and 300 mm. (4" and 12").

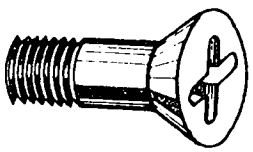

Fig. 6

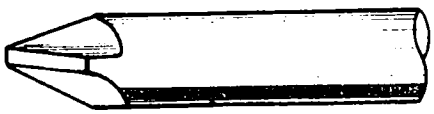

Fig. 7

This measurement is taken as the length of the shank.
The size and shape of the tips are proportional to the diameter of the shank of the screwdriver.
For screws with crossed slots, (Fig. 6) a screwdriver with a cross-shaped tip is used. This one is known as "PHILLIPS" (Fig. 7).

Conditions of use

The handle should be firmly set on the shank.
This keeps it from slipping off.

CARE

Store the screwdriver in an appropriate place.

THE HAND DRILL

The hand drilling machine can be transported easily and is operated by hand; feed pressure is done manually.
It is used for making holes in any position. Figure 1 shows its main parts.

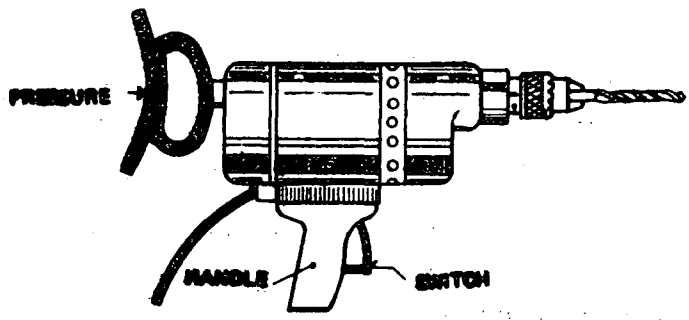

Fig. 1

CHARACTERISTICS

The most important details of this machine are:

Power of the motor.
Number of r.p.m.
Drill diameter capacity.
Voltage of the machine.

Accessories

Drill chuck and key.
Extension cord.

Conditions of use

a The spindle should be centered.
b The extension cord should be in good condition (without chafing)

Care

a Avoid knocking and dropping.
b Clean after use.
c Store in an appropriate place.

THE DRILL PRESS

The drill press has a rather long cylindrical column on which is mounted the transmission of movement of the table and the base.

This support or column allows moving and turning the transmission system and the table depending on the size of the workpieces.

The drill presses may be:

Bench type	Simple and radial
Floor type	Simple and radial

Bench type

This type has a short column and is fixed on a bench or pedestal (Fig. 2).

Floor type

This type has a long column and is fixed to the floor (Fig. 3).

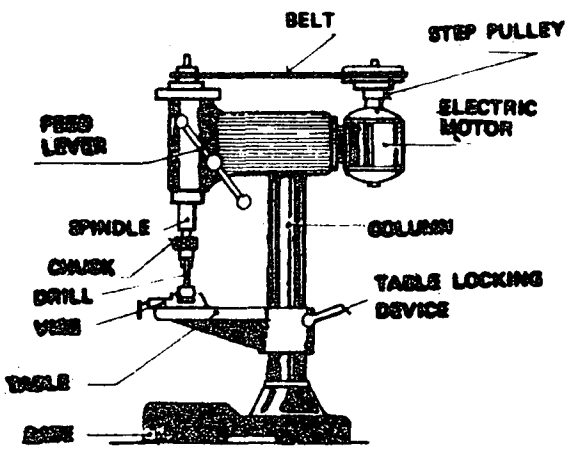

Fig. 2

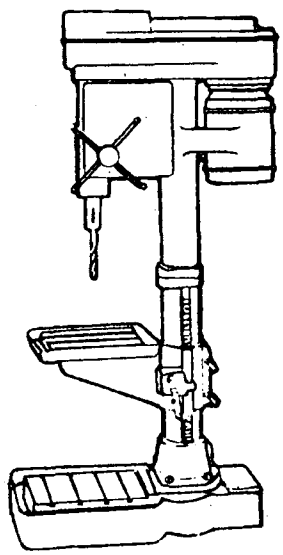

Fig. 3

Radial drill press

Its difference from the simple ones is that the spindle can be moved, within certain limits, to a required position or distance and the table can only move in a direction lengthwise to the base. On the multiple spindle drill press, the table moves crosswise. Figure 4

shows a radial drill press and its most important parts.

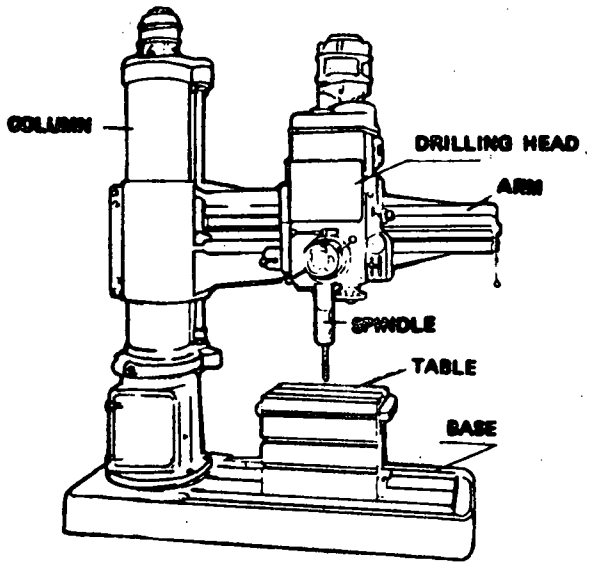

Fig. 4

Conditions of use:

a The drill press must always be clean.

b The spindle should be centered.

c The chuck should be well secured.

d The drill should be well held and centered.

Care

Always clean and lubricate the machine after use, this ensures its good working condition.

CBC

TECHNOLOGICAL INFORMATION
CLAMPING DEVICES (MACHINE VICES)

These are accessories generally made of cast iron. They have two jaws, one fixed and one movable which move along a guide by means of a bolt and nut. The action is obtained through a crank handle. The jaws are made of hardened carbon steel.

There are many types of vices and among them are the fixed base, the swivel base and pivot vice which can be pivoted in any angle (Figs. 1, 2, 3 and 4).

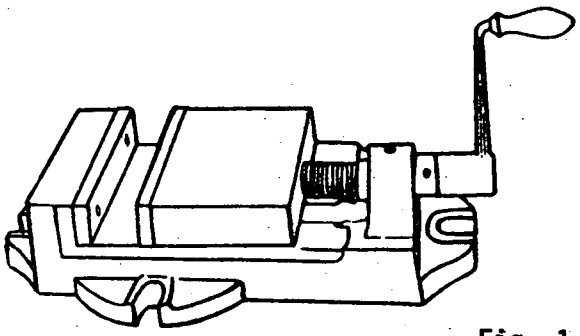

Fig. 1

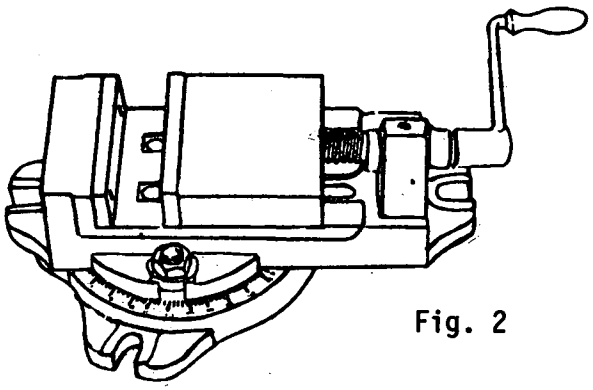

Fig. 2

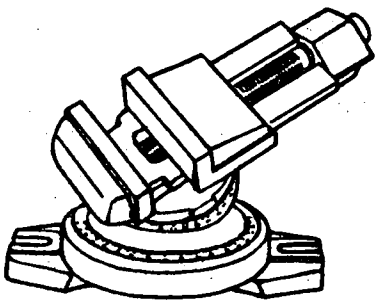

Fig. 3

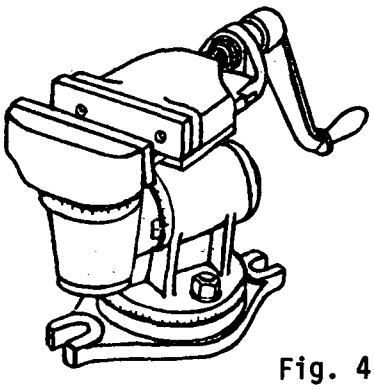

Fig. 4

These vices are used for holding workpieces on machine tools such as drill presses, milling machines, planers, tool sharpeners, etc.

Characteristics

The machine tool vices differ in size and use.

The fixed and swivel base type are sold taking into consideration their capacity, width of the jaws and height. The pivoting vices are sold taking into consideration the width of the jaws, maximum capacity, maximum pivot in degrees, graduated base and height.

Conditions of use

The locking bolts of the vices should be well tightened. The ways of the movable jaw should be well adjusted in the guides.

Care

The vice should be clean, lubricated and kept in an appropriate place.

CBC

TECHNOLOGICAL INFORMATION

CUTTING SPEED OF THE SHAPER (TABLES)

REF. TIS.068 | 1/1

Caribbean

The cutting tool of the shaper travels back and forth. This causes its speed to be variable. This speed goes from zero to a maximum value. This occurs, because the ram of the shaper stops at both ends of its stroke. From each end the speed increases rapidly until it reaches the highest speed at the middle point of its stroke. The following table shows the average cutting speeds for work done on the shaper using high speed cutting tools.

Cutting speed in metres per minute

Material	% Carbon	Cutting speed (m/min)
Low mild carbon steel	0.05 - 0.15	18
Mild carbon steel	0.15 - 0.3	16
Medium mild carbon steel	0.30 - 0.45	14
Medium high carbon steel	0.45 - 0.65	10
High carbon steel	0.65 - 0.9	8
Extra-high carbon steel	1.0 - 1.5	6
Stainless steel	-	5
Gray iron	-	15
Cast iron	-	12
Bronze	-	32
Phosphor-bronze	-	12
Aluminium-Magnesium Hard Brass	-	100
Aluminium Alloys Hard Brass	-	60
Copper	-	26
Plastic Material	-	26

CBC

TECHNOLOGICAL INFORMATION

THE SHAPER (RAM AND AUTOMATIC FEED)

Depending on its operation, the shaper can be divided into two types:

1. *THE MECHANICAL DRIVE SHAPER.* In this machine, the movements of the *RAM, WORKTABLE, AND TOOL HEAD* are by mechanical transmission.
2. *THE HYDRAULIC DRIVE SHAPER.* In this machine, the *ELECTRIC MOTOR* operates an *OIL PUMP.* The main movements of this machine are obtained from the oil pump by means of its different controls and valves.
   In this sheet only the *MECHANICAL DRIVE SHAPER* will be studied.

RAM STROKE MECHANISM

The rotary movement of the electric motor (transmitted through the gearbox) is transformed in a back and forth movement of the ram. This is obtained by means of a *rocker arm* (Figs. 1 and 3) and *crankpin* system which is mounted on the *bull wheel* or *bull gear* (Figs. 1 and 2).

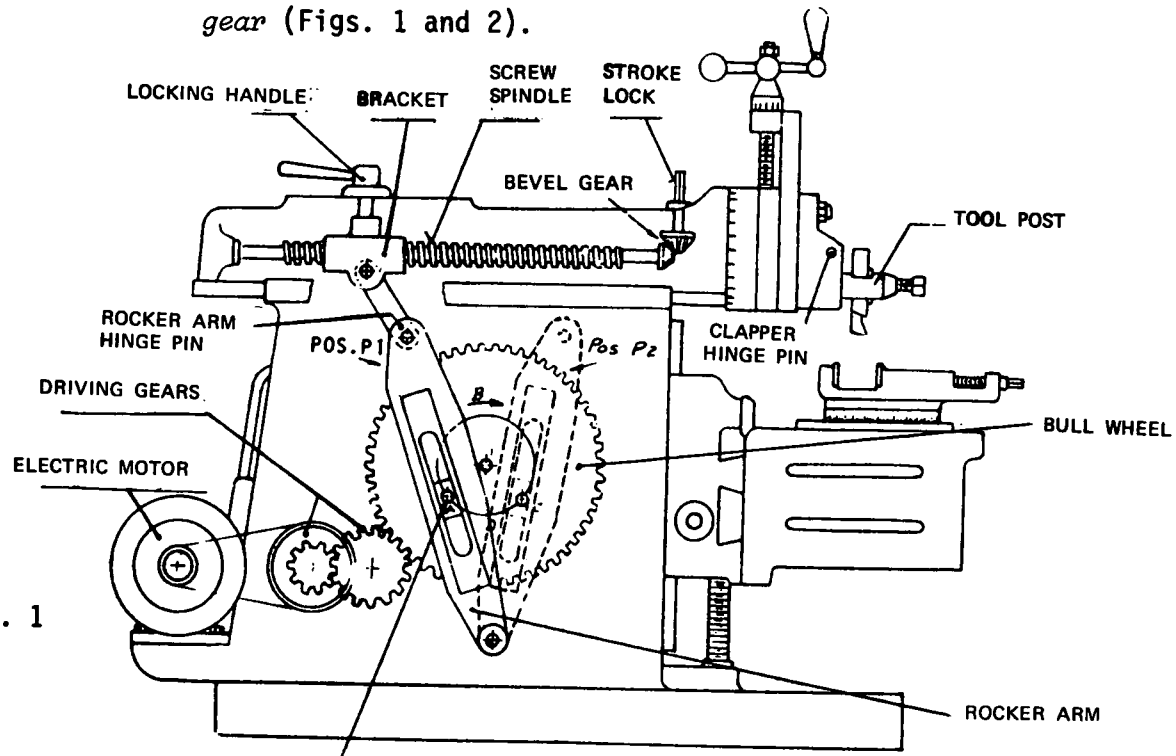

Fig. 1

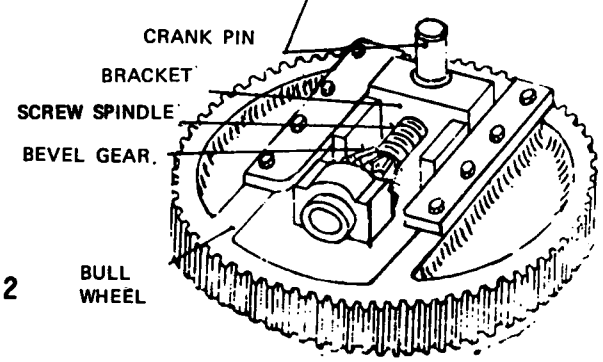

Fig. 2

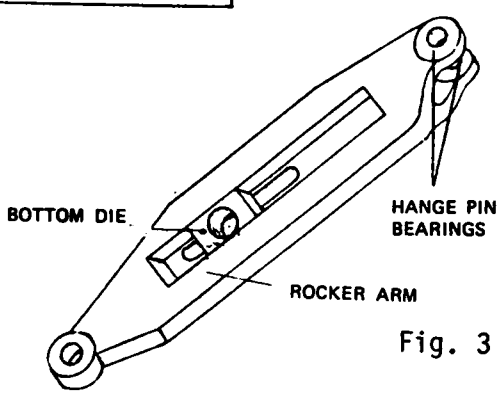

Fig. 3

The length of the crankpin can be changed (Fig. 2) for increasing or reducing the length of the stroke. For this the length of stroke adjustment (Fig. 4) turns the bevel gear (Fig. 2) which makes the shaft turn thus shifting the position of the crankpin. This changes the length of the stroke.
The position of the stroke is controlled by the mechanisms shown in Figure 1: shaft, bracket (on body), hinge pins, rocker arms and operating devices (stroke lock, bevel gear and clamp).

HORIZONTAL FEED MECHANISM

This mechanism by which a crosswise movement of the work table is obtained, is outside the body of the shaper (Figs. 4 and 5).

With every stroke of the ram, feed disc B moves tongue U with feed drive arm A. Tongue U engages gear R which is mounted on the cross feed screw (Fig. 4). The screw makes a fraction of a turn which moves the work table by means of a ratchet bracket. The cross feed rate of the table is governed by the position on the slotted disc, at which the feed drive arm is anchored.

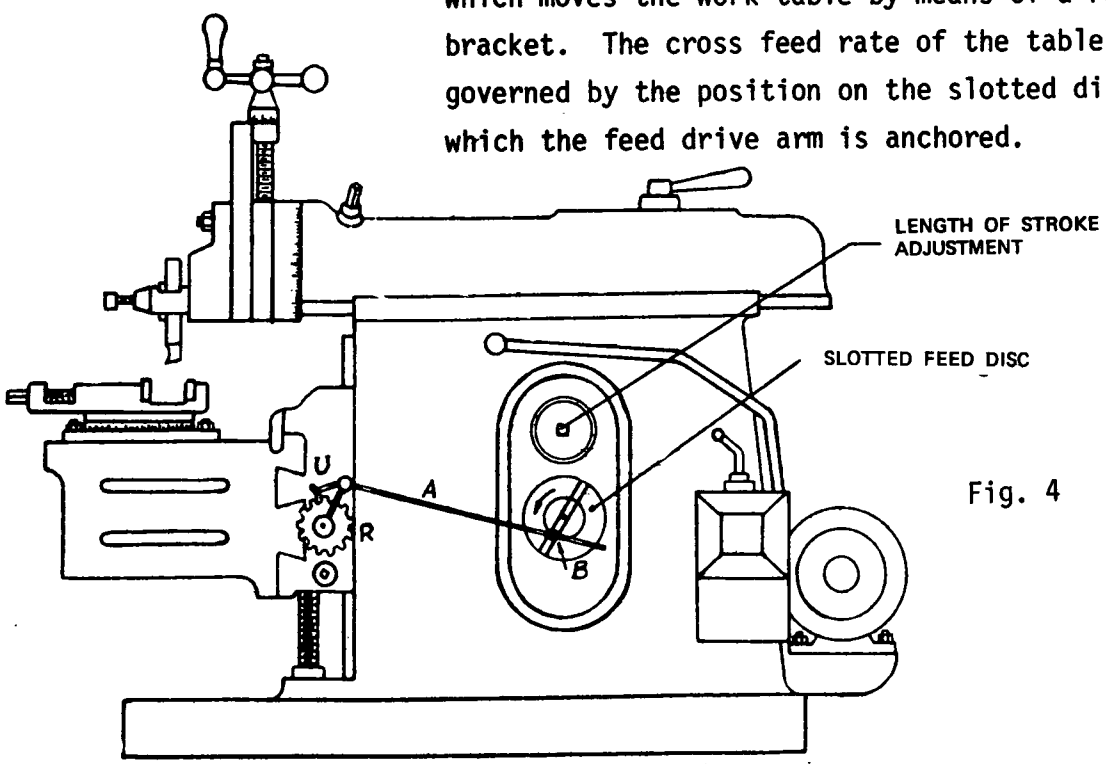

Fig. 4

VERTICAL FEED MECHANISM OF THE TOOL HEAD

In this type of ram there is a trip lever which works in connection to shaft and spindles, bevel gears and bracket. These transmit movement to the tool head feed screw (Fig. 5). The movement occurs when the trip lever comes in contact with the stop.

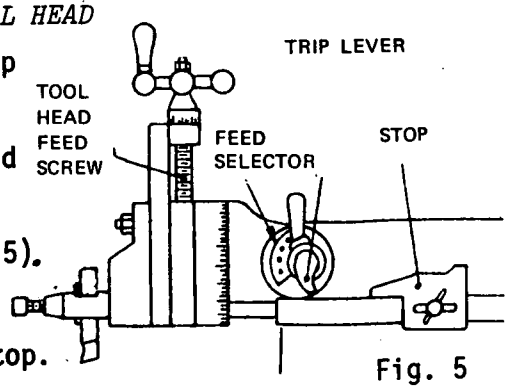

Fig. 5

These are cutting tools, made of a special hardened steel with which *scraping* is carried out.

Scrapers have different shapes. They are used depending on the kind of scraping to be done (Figs. 1, 2 and 3).

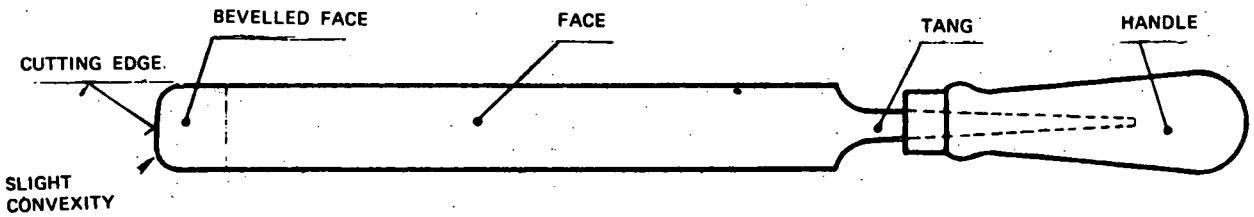

Fig. 1

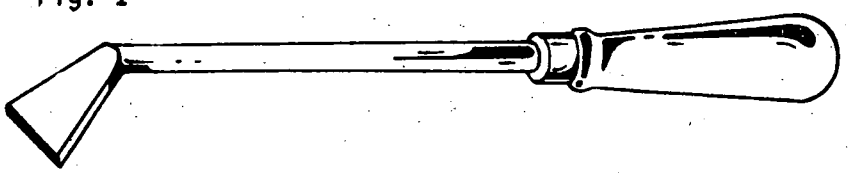

Fig. 2

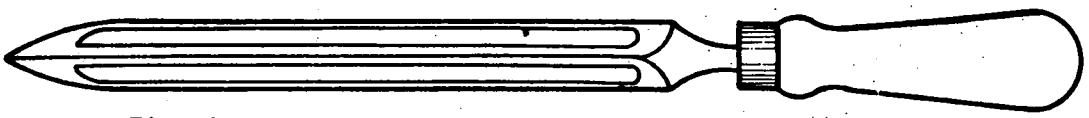

Fig. 3

Scrapers are used for scraping worktables of machine tools, lathe beds, multiple spindle drill tables, layout tables, bearings and bushings.

TYPES AND CHARACTERISTICS

Flat scraper for lengthwise push

This scraper is made of the steel used for files or of special steel. The point is slightly convex and forms an angle of approximately 3°. The positive angle is used for rough scraping. The negative angle is used for finishing. The bevelled faces (Fig. 4) should not have scores. The faces can be perfectly shaped on the sharpening-stone.

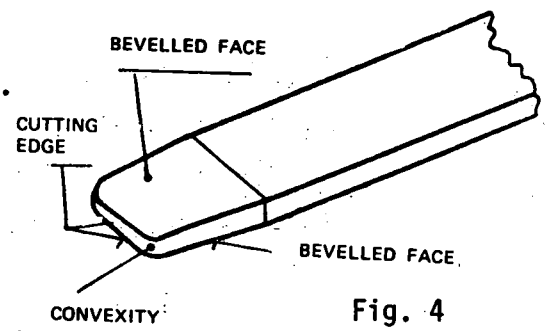

Fig. 4

Bent scraper for pulling movement

This scraper is made of a special steel with a wedge-shaped flattened end. It is bent forming an angle of 120° and ground to the desired shaped.

The cutting edge should have a slight bend and be sharp.
Only the point should be hardened. The length of the scrapers may vary from 250 to 300 mm.
Figure 5 shows the most common shapes and profiles.

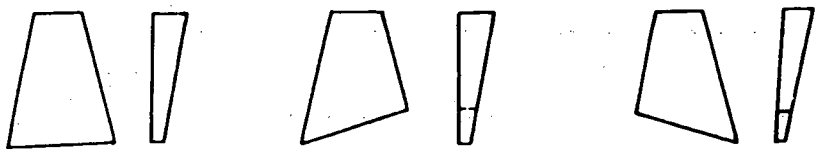

Fig. 5

Bent point scraper with hard metal tip
This scraper is fixed on a carbon steel support by means of a clamping plate and screws (Fig. 6).

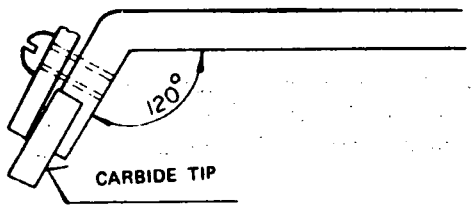

Fig. 6

3-Square scraper
This scraper is made of the steel used for files or of forged steel. It comes in lengths of 200 or 300 mm (Fig. 7).

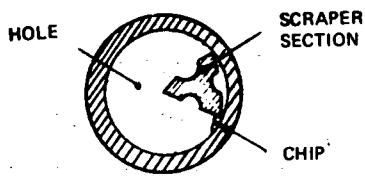

Fig. 7

These scrapers are used for finishing concave surfaces. They have three cutting edges.
The faces of a 3-square scraper can be partially hollow ground. In this case they have the advantage of being easily sharpened (Fig. 8).

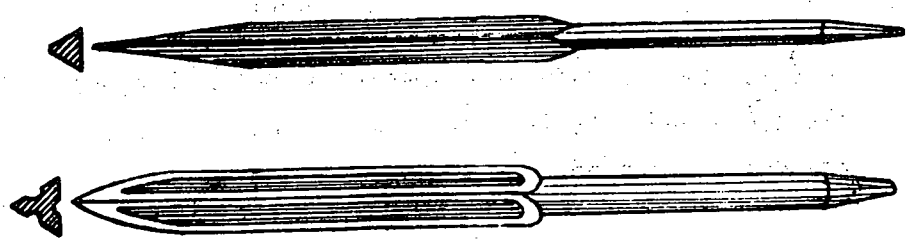

Fig. 8

Special scrapers for bearings

These scrapers have two curved cutting edges -A. These edges allow the scraper to cut on the proper spot when adjusting a bearing by scraping (Fig. 9).

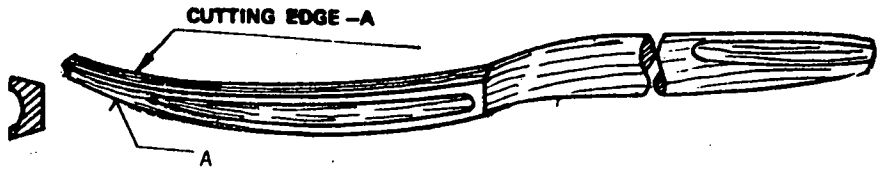

Fig. 9

CONDITIONS OF USE

When using the scrapers, it is very important to keep their cutting edges sharp and free of dents.

The results obtained from scraping depends on the hardness of the cutting edges and the caution taken while sharpening the tool.

CARE

After working with a scraper, it should be cleaned with kerosene, well dried and greased. The cutting edges should be wrapped in cloth or in a suitable leather sheath.

CBC

TECHNOLOGICAL INFORMATION

THE HAND PRESS (COLUMN TYPE)

The hand press is a machine of simple construction. It is a strong machine used in machine shops for mounting and removing bearings and other types of parts which need a pressed-on fit (Figs. 1 and 2). It consists of a cast iron or mild steel body with a feed screw or rack operated by a handle by means of which a vertical movement is obtained.

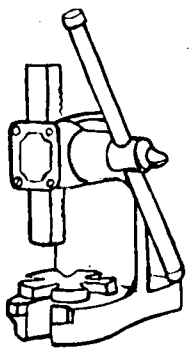

Fig. 1

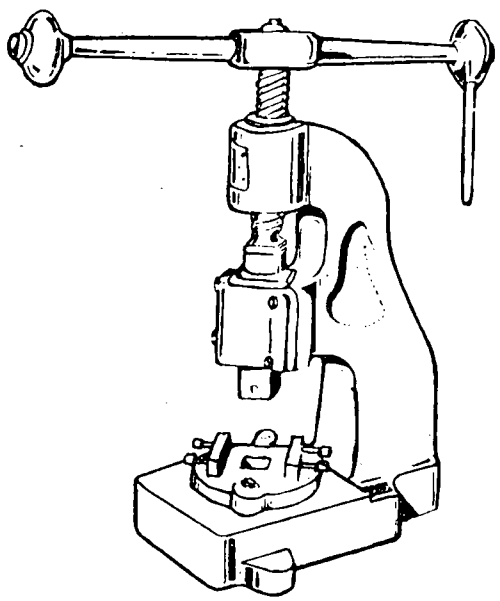

Fig. 2

Types of presses

Hand presses can be of the nut and screw (Fig. 2) or rack and pinion (Fig. 1) types.

Characteristics

Presses are characterized by the type of operations they perform and by the maximum pressure they exert. This pressure varies according to the diameter of the screw or to the diametral pitch of the gear.

Condition of use

Hand presses should be lubricated regularly. When used their force should be applied on the centre of the feed or of the rack.

Care

Avoid impacts. Keep it from exerting idle efforts.

Bearings are mechanical supports which are mounted on shafts and axles. They consist of two rings made of special steel separated from each other by rows of balls or, straight or tapered rollers. The balls and rollers are hardened. These balls or rollers are kept at equal distances from each other, by means of the separators or cages which keep them from rubbing against each other. Depending on their use, they are made of steel, bronze, light metals and even plastic. The outer ring (cup) is fixed to the part or in the bearing housing. The inner ring is directly mounted on the shaft (Figs. 1 to 4).

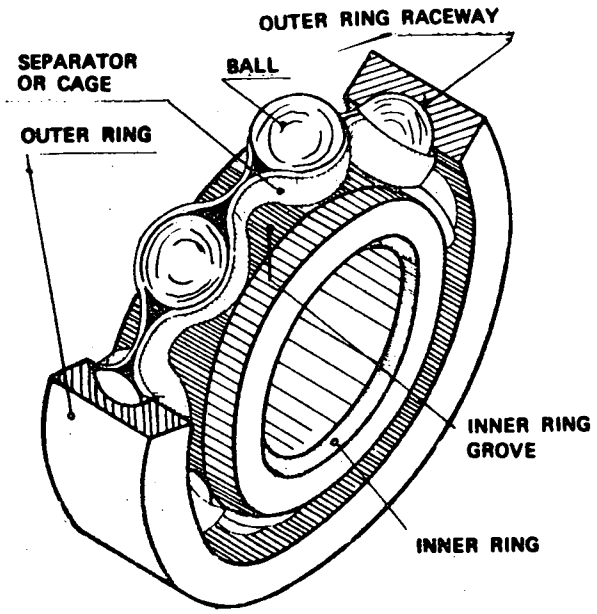

Fig. 1

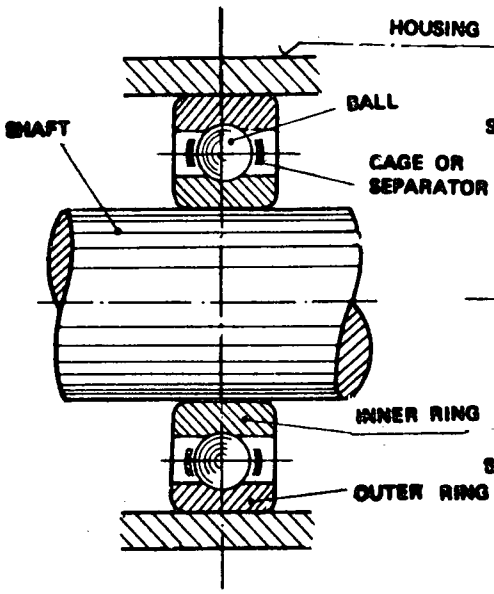

Fig. 2

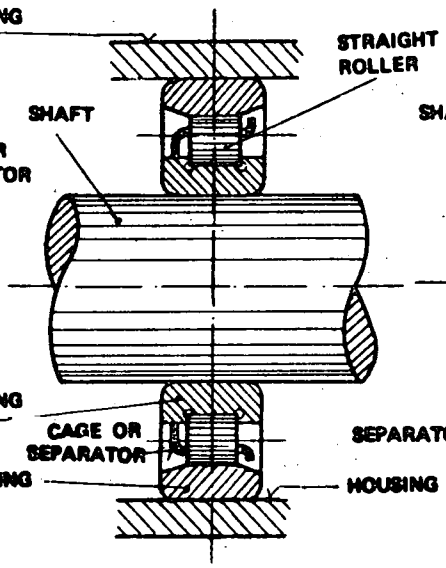

Fig. 3

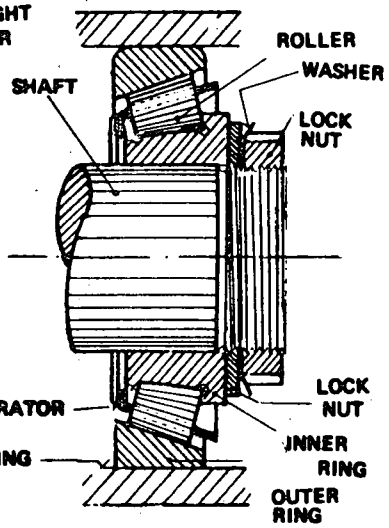

Fig.4

When, in special cases, it is necessary to mount the bearing on a shaft without the previous preparation of reducing its thickness or threading it,

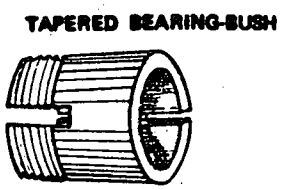

Fig. 5

it is usual to mount a threaded bearing-bush on the shaft (Fig. 5). This secures the inner ring (Fig. 6) tightly by means of a lock nut (Fig. 7) and a lock washer (Fig. 8).

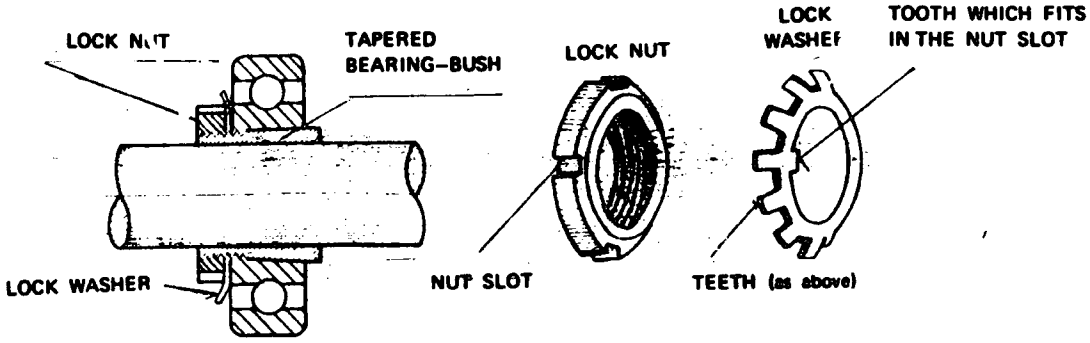

Fig. 6 Fig. 7 Fig. 8

Bearings are used for reducing friction and wear. Work output is increased in this manner.

Bearings are specified according to the following: manufacturer's trade mark, bearing number, shaft measurements, bore diameter (d), outside diameter (D) and width (L). Bearings should have their outer and inner rings, balls or rollers, machined.

Each type of bearing has special characteristics. This type depends on the purpose of the bearing and on the elements which makes it up.

COMMON TYPES OF BARINGS

Fixed ball bearing (Fig. 9)

This bearing has deep raceways. It has no ball groove. It has a high load-carrying ability. It can also carry heavy thrust loads. For this reason it is very suitable for carrying laods from all directions, at very high speeds.

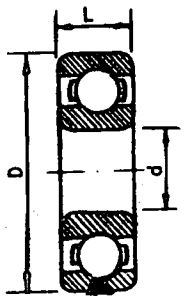

Fig. 9

Angular contact ball bearing (Fig. 10)

Its raceways are such that the line of contact, between the balls and the raceways, forms an acute angle with the shaft. This type of bearing is recommended for very heavy thrust loads.

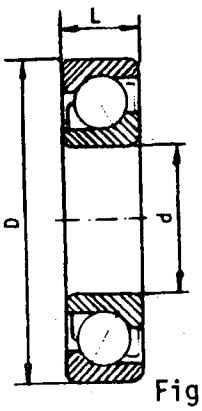

Fig. 10

This bearing should be mounted facing another one.

Double-row angular contact ball bearing (Fig. 12)

This bearing has its raceways shaped in such a manner, that the line that passes through the points of contact of the balls, crosses two points on the shaft, relatively distant from each other. When carrying thrust loads it limits the deflections of the shaft very accurately. This type of bearing is recommended in the special cases in which these limits are needed.

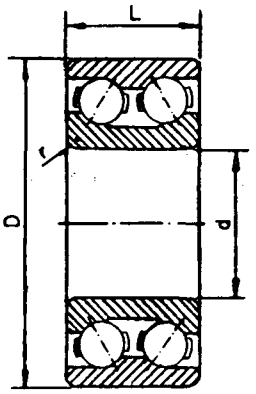

Fig. 11

Self-aligning ball bearing (Fig. 12)

This bearing aligns itself. The inner ring raceway is curved. Because of this, the balls and the inner ring can shift away from the centre. With this shift the course of the bearing on the outer ring is immediately varied. This balances any change of position between the shaft and the centre of the housing of the bearing.

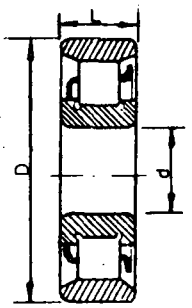

Fig. 12

Straight roller bearing (Fig. 13)

The rollers of this type of bearing are guided by shoulders. These shoulders are on one of the rings. This shape has the advantage of allowing the bearing to shift on the shaft, whithin certain limits, between the shaft and the housing. This bearing is used for heavy radial loads and high speeds. If this type of bearing has shoulders on both rings, it will be able to guide the shaft in its lengthwise movements. This is so when the thrust loads are very small.

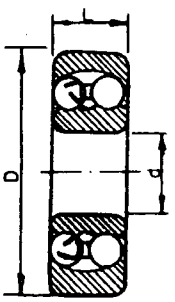

Fig. 13

Self-aligning roller bearing (Fig. 14)

This type of roller bearing, as the self-aligning ball bearing, is used when slight tilts of the shaft have to be balanced. The difference between both is that the roller type is capable of carrying heavier loads.

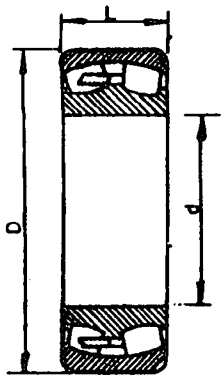

Fig. 14

Tapered roller bearing (Fig. 15)

These tapered rollers are obliquely arranged. This makes them specially suitable for carrying both heavy thrusts and raidal loads from one direction. In order to carry thrusts laods from both directions, two tapered roller bearings are mounted, facing each other.

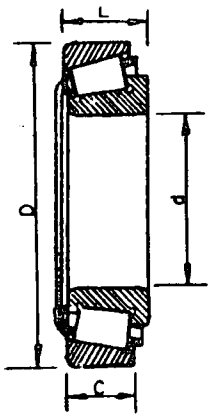

Fig. 15

Thrust self-aligning roller bearing (Fig. 16)

In bearings of this type, the rollers are obliquely arranged. They are guided by a lip on the raceway of the separable outer ring (or cup). The rollers revolve around, and in contact with the fixed inner ring or cone raceway.
This bearing allows correct self-alignment and is capable of carrying high radial and thrust loads.

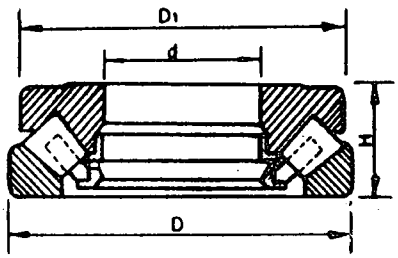

Fig. 16

Thrust ball bearing (Fig. 17)

This bearing has one row of balls between two rings. It is suitable for carrying thrust loads from one direction.

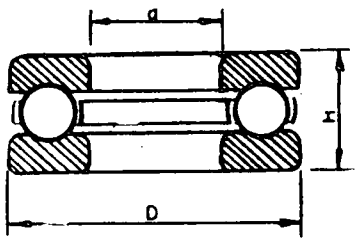

Fig. 17

The thrust double-row bearing (Fig. 18) has two rows of balls arranged between three rings.
This type of bearing is designed for carrying thrust loads from both directions.

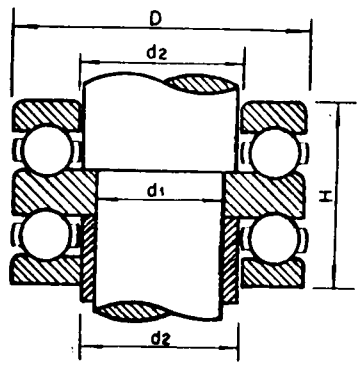

Fig. 18

Needle bearing (Fig. 19)

This bearing has a very thin cross section when compared to the most common types of roller bearings. It is specially used when there is a limited radial space.

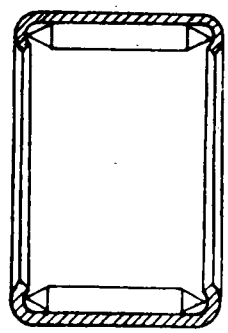

Fig. 19

There are many other types of bearings. These can be found in manufacturers' catalogues.

Anti-friction bearings are straight or tapered parts, made of anti-friction metal or plastic materials which are used as mechanical supports on which revolving shafts rest. These parts are usually fitted in supports made of cast iron. They are called housings (Fig. 1).

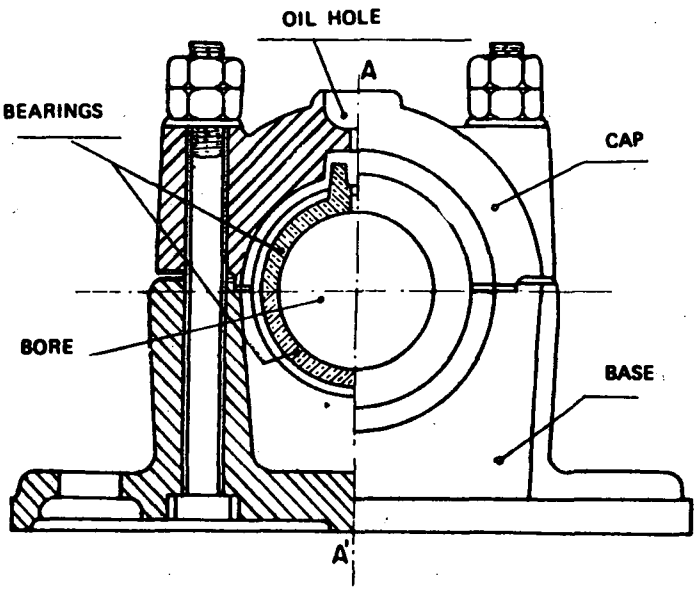

Fig. 1

These bearings reduce shaft friction and wear and are characterized by the materials of which they are made. These give them the necessary mechanical properties.

These bearings are classified as follows:

a *anti-friction radial bearings*, for radial stresses (Fig. 2);
b *anti-friction thrust bearings*, for thrust stresses (Fig. 3);
c *tapered bearings*, for stresses in both directions (Fig. 4).

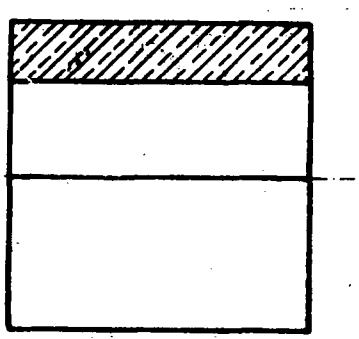

Fig. 2

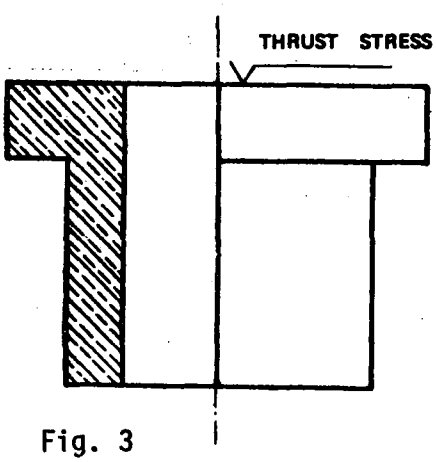

Fig. 3

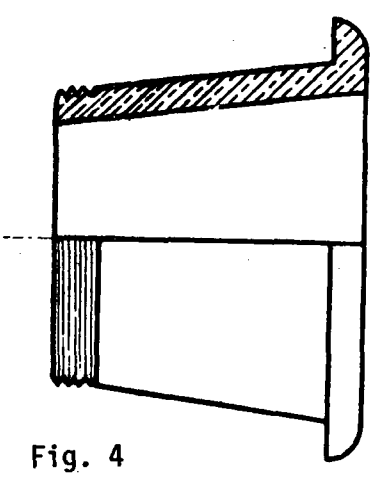

Fig. 4

Anti-friction bearings for radial stresses may be of different shapes, the more common ones are made of a body with a straight bore which has a hole through which lubricants are applied. They are used for carrying small loads in places and parts easily maintained (Fig. 5).

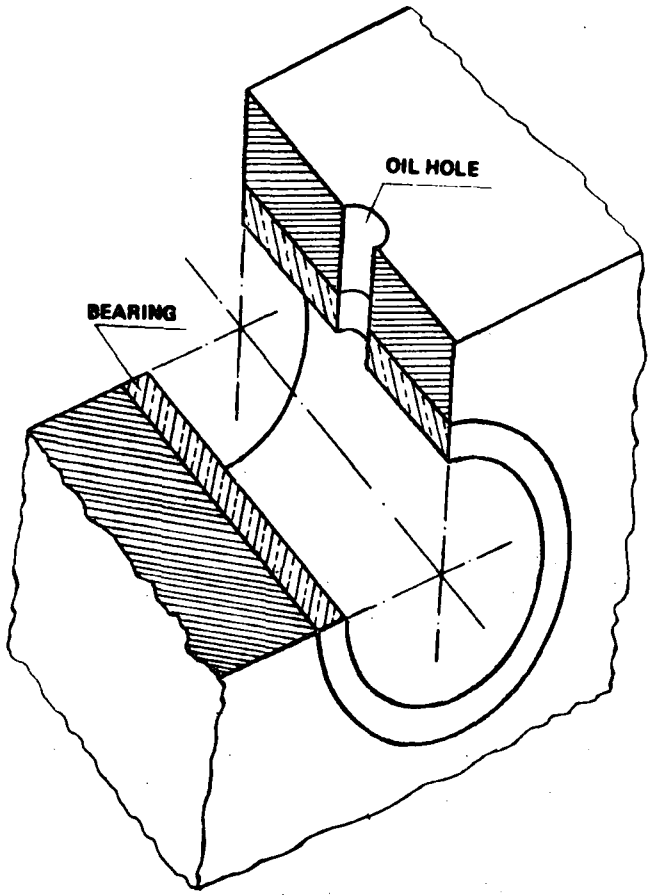

Fig. 5

In some cases, these bearings are straight inside and tapered outside. Both ends are threaded and they have three lengthwise grooves (Fig. 6) which allows for their adjustment.

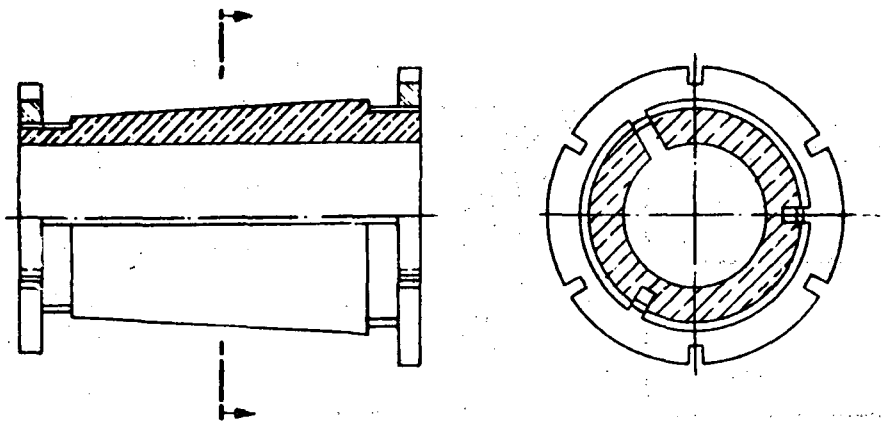

Fig. 6

CINTERFOR
SERVICIO DE INFORMACION Y DOCUMENTACION
MONTEVIDEO

Anti-friction thrust bearings are used for carrying the stress of a shaft in the vertical position (Fig. 7).

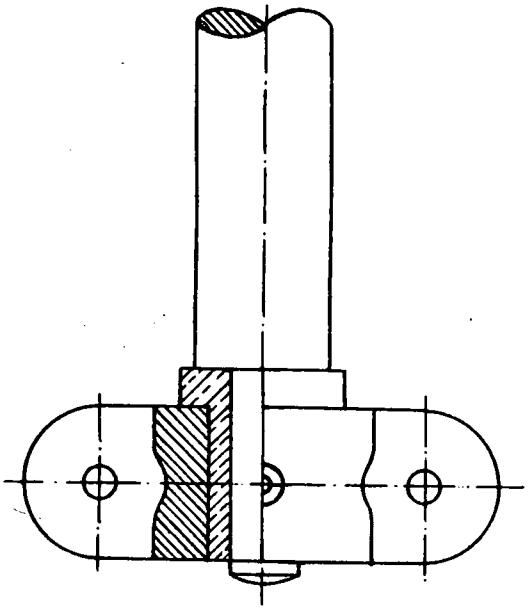

Fig. 7

Tapered bearings are used for supporting a shaft which exerts radial and thrust stresses. These types of bearings, usually, depend on a fixing device, for that reason they are not used very much (Fig. 8).

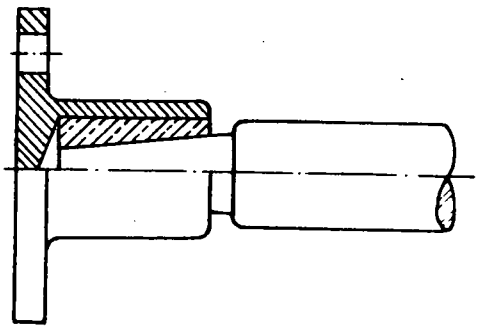

Fig.8

Housings are used for fixing the bearings and they are usually made of two castings: the base and the cap (Fig. 9). Sometimes they are cast in one block (Fig. 10) and have different shapes.

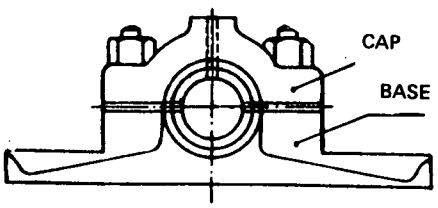

Fig. 9

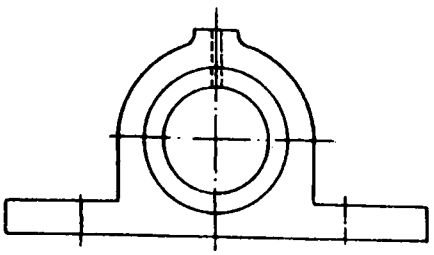

Fig. 10